LA-4396

c.3

CIC-14 REPORT COLLECTION
REPRODUCTION
COPY

LOS ALAMOS SCIENTIFIC LABORATORY
of the
University of California
LOS ALAMOS • NEW MEXICO

3DDT, A Three-Dimensional Multigroup Diffusion-Burnup Program

LOS ALAMOS NATIONAL LABORATORY
3 9338 00377 9161

UNITED STATES
ATOMIC ENERGY COMMISSION
CONTRACT W-7405-ENG. 36

LEGAL NOTICE

This report was prepared as an account of work sponsored by the United States Government. Neither the United States nor the United States Atomic Energy Commission, nor any of their employees, nor any of their contractors, subcontractors, or their employees, makes any warranty, express or implied, or assumes any legal liability or responsibility for the accuracy, completeness or usefulness of any information, apparatus, product or process disclosed, or represents that its use would not infringe privately owned rights.

This report expresses the opinions of the author or authors and does not necessarily reflect the opinions or views of the Los Alamos Scientific Laboratory.

Printed in the United States of America. Available from
Clearinghouse for Federal Scientific and Technical Information
National Bureau of Standards, U. S. Department of Commerce
Springfield, Virginia 22151
Price: Printed Copy $3.00; Microfiche $0.65

Written: February 1970
Distributed: September 1970

LA-4396
UC-32, MATHEMATICS
AND COMPUTERS
TID-4500

LOS ALAMOS SCIENTIFIC LABORATORY
of the
University of California
LOS ALAMOS • NEW MEXICO

3DDT, A Three-Dimensional Multigroup Diffusion-Burnup Program

by

John C. Vigil

TABLE OF CONTENTS

ABSTRACT		1
I.	INTRODUCTION AND SUMMARY	1
II.	FORMULATION OF DIFFERENCE EQUATIONS	2
III.	SOLUTION OF DIFFERENCE EQUATIONS	5
IV.	IMPLICIT EIGENVALUE SEARCHES	6
V.	BURNUP MODEL	8
REFERENCES		8
APPENDIX A:	Input Instructions	9
APPENDIX B:	Storage Requirements	15
APPENDIX C:	Simplified Logical Flow Diagram	17
APPENDIX D:	Variable-Dimensioned Arrays and Nonsubscripted Common Variables	19
APPENDIX E:	Executed Sample Problem	24

3DDT, A THREE-DIMENSIONAL MULTIGROUP DIFFUSION-BURNUP PROGRAM

by

John C. Vigil

ABSTRACT

3DDT is a three-dimensional (X-Y-Z or R-θ-Z) multigroup diffusion theory code. It can be used to compute k_{eff} or to perform criticality searches on reactor composition, time absorption, or reactor dimensions by either the regular or the adjoint flux equations. Material burnup and fission production buildup can be computed for specified time intervals, and criticality searches can be performed during burnup to compensate for fuel depletion and fission product growth.

All programming is in FORTRAN-IV and variable dimensioning is used to make maximum use of available core storage. Because variable dimensioning is used, no simple restrictions can be placed on individual components of the problem. However, a 16-group problem containing 30 x 30 x 30 mesh points and 80 zones can be accommodated on a 65k computer. Execution times are about 0.01 sec per mesh point per group for a k_{eff} calculation on a CDC 6600 computer.

I. INTRODUCTION AND SUMMARY

The 3DDT (3-Dimensional Diffusion Theory) code is an extension to three space dimensions of the 2DB two-dimensional code.[1] Except that the geometry options are X-Y-Z or R-θ-Z and that programming is for the CDC 6600 computer, 3DDT contains all of the 2DB features. Some of these features are:

- Multigroup calculations of k_{eff} or criticality searches on reactor composition, reactor dimensions, or time absorption (alpha) by means of either the regular or the adjoint flux equations.
- Material burnup and fission product buildup can be computed for specified time intervals, and criticality searches can be performed during burnup to compensate for fuel depletion and fission product growth.
- All programming is in FORTRAN-IV and variable dimensioning is used to make maximum use of available storage.
- Convergence is accelerated by group rebalancing, successive overrelaxation, and line inversion.
- Alpha and k_{eff} can be used as parametric eigenvalues.
- DTF-IV input formats[2] are used.
- Only downscattering is treated.

A description of the mathematical model is given in the body of the report and follows closely the description given in the 2DB user's manual.[1] Input instructions, storage requirements, a simplified logical flow diagram, a description of the variable-dimensioned arrays and nonsubscripted common variables, and an executed sample problem are included, respectively, in Appendices A through E. Although the logical flow of the code is patterned after the 2DB code (which in turn is patterned after the DTF-IV and 2DF codes[3]), a considerable amount of programming was required to extend 2DB to three space dimensions. Most of the programming effort was the result of the storage arrangements and the concomitant transfer of data from one storage medium to another.

Both Extended Core Storage (ECS) and disk storage are utilized in 3DDT. In general, four-dimensional arrays, e.g., $\phi(x,y,z,g)$, are stored on the disk using tape file simulation; three-dimensional arrays, e.g., $\phi(x,y,z)$ for a particular energy group, are stored in the ECS using random access; and two-dimensional arrays, e.g., $\phi(x,y)$ for a particular energy group and axial position,

are stored in the central memory. Thus, central memory storage requirements are insensitive to the number of energy groups and the number of axial mesh points.

Because variable dimensioning is used, no simple restrictions can be placed on individual components of the problem such as number of energy groups or number of mesh points. However, most three-dimensional problems of practical interest (from the viewpoint of computing time) can be accommodated on a machine with a 130k central memory and many can be accommodated on a 65k machine. Because of the manner in which arrays are stored in 3DDT, very large two-dimensional (in R-Z or X-Z geometry) problems can be run on a 65k machine.

Eigenvalues and fluxes computed with 3DDT for several test problems agreed very well with results obtained with 2DB for corresponding two-dimensional problems. Execution times are similar to those for 2DB (for equal size problems) and are of the order of 0.01 to 0.02 sec per mesh point per group. Thus, a six-group problem containing 30 x 30 x 30 mesh points would require from 30 to 60 min of computing time on the CDC 6600 computer. The low estimate applies to a k_{eff} calculation, and the high estimate applies to an implicit eigenvalue search calculation. On the CDC 7600 computer, which is reported to be about four times faster than the CDC 6600, the utility of 3DDT will be greatly enhanced.

Possible areas for future work on 3DDT include (not necessarily in order of priority):

1. Incorporation of internal boundary conditions (principally for use in control rod problems).
2. Incorporation of a spherical (R-θ-φ) and/or a hexagonal-Z geometry option in addition to the X-Y-Z and R-θ-Z options currently available.
3. Computation of neutron balance by zone (the present version computes only the overall neutron balance).
4. Computation of neutron currents for use in a three-dimensional perturbation code.
5. Extension of the burnup routines to allow computation of buildup of individual fission products such as xenon and samarium. In the present version, fission products are treated as a single nuclide and are characterized by a single decay constant and a single cross-section set.
6. Incorporation of upscattering (the present version is limited to downscattering).
7. Incorporation of a source option.
8. Use of sequential ECS access (tape file simulation) to make 3DDT compatible with computing systems for which ECS is not available. The present version uses random ECS access, which is much faster than sequential file access.

II. FORMULATION OF DIFFERENCE EQUATIONS

The neutron balance equations, in the multigroup diffusion approximation with no upscatter, are

$$\nabla \cdot D_g \nabla\phi_g - \Sigma_g^r \phi_g + S_g = 0 \qquad (1)$$

$$(g=1,2,\ldots,IGM),$$

where

$$S_g = \frac{\chi_g}{k_{eff}} \sum_{g'=1}^{IGM} \nu\Sigma_{g'}^f \phi_{g'} + \sum_{g'=1}^{g-1} \Sigma_{g'\to g} \phi_{g'} \qquad (2)$$

and

IGM = number of energy groups,

g = energy group index,

ϕ_g = neutron flux in group g,

S_g = neutron source for group g from fission and downscatter from higher energy groups,

D_g = diffusion coefficient for group g

$$D_g = 1/3\Sigma_g^{tr},$$

Σ_g^{tr} = macroscopic transport cross section for group g,

$\nu\Sigma_g^f$ = average number of neutrons per fission times the macroscopic fission cross section for group g,

$\Sigma_{g'\to g}$ = macroscopic transfer cross section from g' to g,

Σ_g^r = macroscopic removal cross section for group g given by

$$\Sigma_g^r = \Sigma_g^a + \sum_{g'=g+1}^{IGM} \Sigma_{g\to g'},$$

Σ_g^a = macroscopic absorption cross section for group g,

χ_g = fraction of fission neutrons born in group g, and

k_{eff} = effective multiplication factor.

The spatial difference equations are obtained by integrating Eq. (1) over the volume associated with each mesh point. Each mesh point is assumed to be at the center of its associated mesh volume. The mesh point arrangement in X-Y-Z geometry is illustrated in Fig. 1. For the (i,j,k) mesh point, labelled 0 in Fig. 1, the radial integration is from $(x_i - \Delta x_o/2)$ to $(x_i + \Delta x_o/2)$, the rotational integration is from $(y_j - \Delta y_o/2)$ to $(y_j + \Delta y_o/2)$,

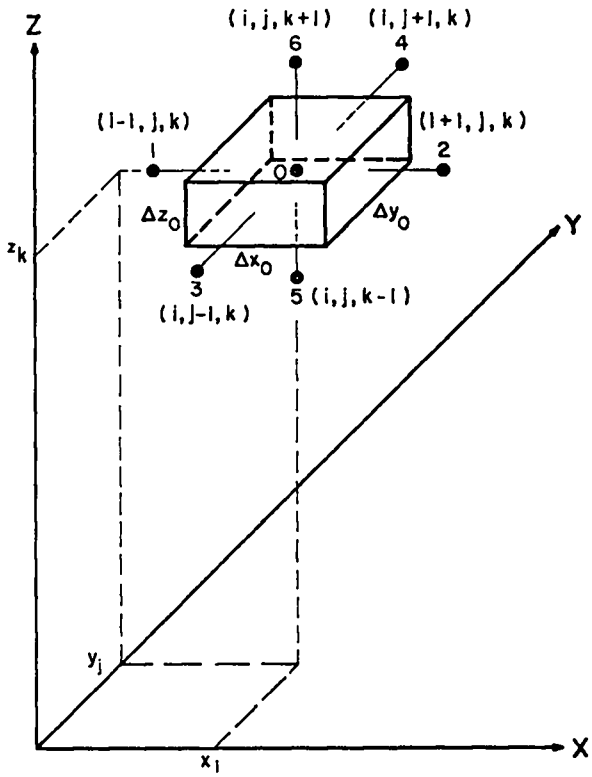

Fig. 1. Mesh point arrangement in X-Y-Z geometry.

and the axial integration is from $(z_k - \Delta z_o/2)$ to $(z_k + \Delta z_o/2)$. In this report, the radial direction refers to either the R or the X direction, the rotational direction refers to either the θ or the Y direction, and the axial direction refers to the Z direction.

The leakage terms are obtained by first transforming the volume integral to a surface integral using the divergence theorem,

$$\int \nabla \cdot D \nabla\phi \, dV = \int D \nabla\phi \cdot \vec{n} \, dA \, , \qquad (3)$$

where $\vec{n}$ is a unit vector normal to the surface. To evaluate the surface integral, the flux gradients at the mesh volume boundaries are approximated by using the two adjacent flux values. The result of volume integration of Eq. (1) for mesh point 0 (see Fig. 1) is thus

$$\sum_{k=1}^{6} \frac{\bar{D}_k A_k (\phi_k - \phi_o)}{\ell_k} - \Sigma_o^r \phi_o V_o + S_o V_o = 0 \, , \qquad (4)$$

where the group index has been omitted for simplicity and

Σ_o^r = macroscopic removal cross section associated with mesh point 0,

S_o = total neutron source rate associated with mesh point 0,

V_o = volume associated with mesh point 0,

ϕ_k = neutron flux at mesh point k,

ℓ_k = distance between mesh point k and mesh point 0,

A_k = area of the boundary between mesh point k and mesh point 0, and

$\bar{D}_k$ = effective diffusion coefficient between mesh point k and mesh point 0, e.g.,

$$\bar{D}_1 = \frac{D_o D_1 (\Delta x_o + \Delta x_1)}{D_o \Delta x_1 + D_1 \Delta x_o} \, .$$

For calculational purposes, Eq. (4) can be written in the simpler form

$$\sum_{k=0}^{6} C_k \phi_k = S_o V_o \, , \qquad (5)$$

where

$$C_k = - \frac{\bar{D}_k A_k}{\ell_k} \qquad (k=1,2,\ldots,6) \qquad (6)$$

and

$$C_0 = \Sigma_o^r V_o - \sum_{k=1}^{6} C_k \, . \qquad (7)$$

The constants C_k (k=0,1,...,6) are computed for the initial system and stored for use in the flux calculation. They must be recomputed whenever material compositions change (as in concentration and alpha searches or in depletion calculations) or whenever changes are made in the mesh intervals (as in delta calculations).

Three boundary conditions are available: reflective, vacuum, and periodic. The periodic boundary condition is available only for the θ (or Y) boundaries. In the flux calculation, the boundary conditions enter only through the values of the constants C_k at the reactor boundaries. To illustrate for reflective and vacuum boundary conditions, consider the one-dimensional slab reactor shown in Fig. 2. In the figure, the left-hand boundary is reflected and the right-hand boundary is free (vacuum).

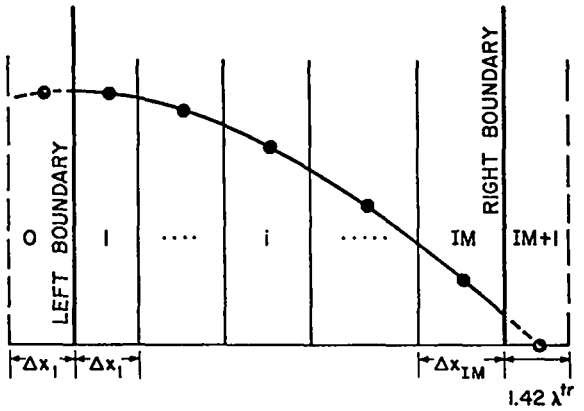

Fig. 2. Slab reactor with reflective condition at left boundary and vacuum condition at right boundary.

Reflective Condition. Imagine that a pseudo-mesh interval, interval 0, has been added on the left-hand side of the left boundary with the same composition and thickness of interval 1. Since $\nabla\phi = 0$ at the left boundary, $\phi_o = \phi_1$ and $\phi_o - \phi_1$ vanishes. Therefore the coefficient, C_1, of $\phi_o - \phi_1$ in Eq. (4) is immaterial and may be set equal to zero. The calculation is performed assuming that $C_1 = 0$, and thus the imaginary flux ϕ_o does not contribute to Eq. (5).

Vacuum Condition. Now imagine that a pseudo-mesh interval, interval IM + 1, with the same composition as interval IM and thickness $1.42\,\lambda^{tr}$, where λ^{tr} is the transport mean free path in interval IM, has been added to the right-hand side of the right boundary. Since $\phi_{IM} \neq 0$ and $\phi_{IM+1} = 0$, the coefficient, C_{IM+1}, of $\phi_{IM} - \phi_{IM+1}$ in Eq. (4) cannot be disregarded. From Eq. (6), it is seen that

$$C_{IM+1} = -\frac{D_{IM}\,A_{IM+1}}{0.5\,\Delta x_{IM} + 0.71\,\lambda^{tr}} \quad , \tag{8}$$

where it is assumed that $\lambda^{tr} = 1/\Sigma^{tr}$. As in the reflective case, there is no contribution of the imaginary flux to Eq. (5). For the reflective case, $C_k = 0$; whereas for the vacuum case, $\phi_k = 0$.

Periodic Condition. To illustrate the manner in which periodic boundary conditions enter into the computation of the constants C_k at the boundaries, consider the one-dimensional slab reactor in Fig. 3. On the left-hand side of the left boundary, an imaginary mesh interval, interval 0, of the same composition and thickness as interval IM has been

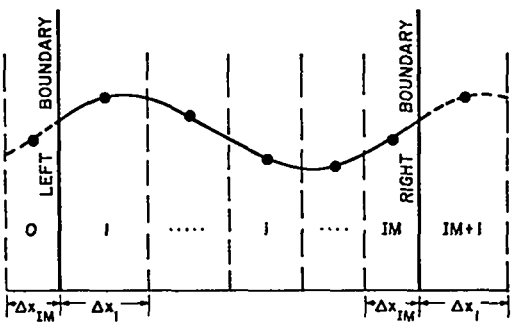

Fig. 3. Slab reactor with periodic boundary conditions.

added. Similarly, an imaginary mesh interval, interval IM + 1, of the same composition and thickness as interval 1 has been added on the right-hand side of the right boundary. For periodic boundary conditions, $\phi_o = \phi_{IM}$ and $\phi_1 = \phi_{IM+1}$. Since in general $\phi_1 \neq \phi_{IM}$ (thus $\phi_o \neq \phi_1$ and $\phi_{IM} \neq \phi_{IM+1}$), the coefficients C_1 and C_{IM+1} cannot be disregarded. From Eq. (6), it is clear that

$$C_{IM+1} = C_1 = \frac{\bar{D}_1\,A_1}{0.5(\Delta x_1 + \Delta x_{IM})} \quad , \tag{9}$$

where

$$\bar{D}_1 = \frac{D_1\,D_{IM}(\Delta x_1 + \Delta x_{IM})}{D_1\,\Delta x_{IM} + D_{IM}\,\Delta x_1} \quad . \tag{10}$$

The imaginary mesh intervals discussed in the examples above are not a part of the code. They are mentioned only to illustrate the manner in which the boundary conditions enter into the calculation of the constants C_k at the reactor boundaries.

The adjoint form of the multigroup diffusion equations is the same as Eq. (1) except that the source term, Eq. (2), is changed to

$$S_g^* = \frac{\nu\Sigma_g^f}{k_{eff}} \sum_{g'=1}^{IGM} \chi_{g'}\,\phi_{g'}^* + \sum_{g'=g+1}^{IGM} \Sigma_{g\to g'}\,\phi_{g'}^* \quad , \tag{11}$$

where ϕ_g^* is the adjoint flux in group g. Note that the adjoint of a downscatter problem has the characteristics of a more time-consuming upscatter problem in that the flux in groups $g' > g$ contribute to the source in group g. The code solves the adjoint form by transposing the scattering matrix and redefining the fission source term as in Eq. (11). In addition, the code inverts the group order of the cross

sections, the fission spectrum, and the neutron velocities. By proceeding in this manner, the upscatter problem becomes a downscatter problem and the calculation can proceed through the same calculational loops as for regular problems.

III. SOLUTION OF DIFFERENCE EQUATIONS

Standard source-iteration techniques are used to compute eigenvalues and flux profiles. Using an initial flux guess, an initial fission source distribution is calculated. New flux profiles in each group are sequentially computed, beginning in the highest energy group in regular problems and in the lowest energy group in adjoint problems. The flux in each group is normalized immediately before each group calculation by balancing the total source and loss rates. After the new fluxes in all groups have been calculated, a new fission source distribution is computed from the new flux profiles. The multiplication ratio, λ, is obtained by taking the ratio of the new (current iteration) total fission source to the old (previous iteration) total fission source. A fission source cycle, i.e., a complete pass through all the energy groups, is called an outer iteration. The outer iteration process is continued until the fission source (λ) converges or until either the maximum number of outer iterations (input parameter DO5) or the problem time limit (input parameter ITIMOF) is exceeded.

In k_{eff} calculations, the fission spectrum, χ, is divided by λ so that λ approaches unity as the problem converges. The effective multiplication factor, k_{eff}, is the product of the successive λ's, which is equivalent to

$$k_{eff} = \frac{\sum_g \chi_g^{initial}}{\sum_g \chi_g^{current}} \quad . \tag{12}$$

Outer iteration convergence is assumed when both $|1 - \lambda_j| < EPS$ and $|\lambda_j - \lambda_{j-1}| < EPS$, where EPS is the lambda convergence input parameter and j is the outer iteration index. Fission source overrelaxation is employed to accelerate convergence. After the fission source profile, F_j, for the jth outer iteration is calculated, a second profile is computed by magnifying the difference between F_j and F_{j-1} according to

$$F_j' = F_j + \beta'(F_j - F_{j-1}) \quad , \tag{13}$$

where β' is the fission source overrelaxation factor. After F_j' is computed from Eq. (13), it is normalized to give the same total neutron source as F_j.

The group fluxes are computed by horizontal (R-θ or X-Y) planes beginning with the plane at the lowermost axial position. A complete sweep of a horizontal plane for a particular axial position and energy group is called an R-θ (or X-Y) iteration. A complete sweep through the entire spatial mesh for a particular energy group is called an inner iteration. Since an inner iteration involves sweeping the horizontal planes at all axial positions, an inner iteration as defined here is sometimes referred to as a Z iteration.

For each energy group, the inner iteration process is continued until either convergence is achieved or the maximum number of inner iterations is exceeded. Two tests must be satisfied for inner iteration convergence. The first test requires that

$$\frac{IGM \int \nu\Sigma_g^f \left| \phi_g^i - \phi_g^{i-1} \right| dV}{\sum_g \int \nu\Sigma_g^f \, \phi_g^{j-1} \, dV} \leq EPS, \tag{14}$$

where the integration is over the entire mesh, i is the inner iteration index, and j is the outer iteration index. Equation (14) is basically a convergence test on the total fission source, with the additional feature that the tightest convergence is required of those groups which contribute the most to the fission source. If the first test is satisfied, the code then requires that

$$\left| \left(\phi_g^i - \phi_g^{i-1} \right) \Big/ \phi_g^{i-1} \right| \leq G06 \tag{15}$$

be satisfied at each mesh point. G06 is the pointwise flux convergence input parameter and is, in general, larger than EPS. Two values for the maximum number of inner iterations per group are specified in the input. The first, S04, is applied if $|1 - \lambda| > 10EPS$ and the second, G07, is applied otherwise. For each outer iteration, the number of inner iterations is at least equal to IGM and is

not larger than IGMxIIPG, where IGM is the number of energy groups and IIPG is equal to either S04 or G07 as appropriate.

During an inner iteration, the R-θ plane at each axial position is swept until either the fluxes converge or the maximum number of R-θ iterations per plane is exceeded. The test for R-θ convergence is the same as the pointwise test, Eq. (15), for inner iteration convergence. The maximum number of R-θ iterations per plane is computed internally from IIPG/M05 where M05 is the R-θ iteration reduction factor specified in the input. For each inner iteration, the number of R-θ iterations is at least equal to KM and is not larger than IIPGxKM/M05, where KM is the number of axial mesh points.

In each horizontal plane, the fluxes are computed using line inversion. That is, the fluxes on each rotational (or radial) line are assumed to be unknown, and all other fluxes coupled to the unknown fluxes are assumed to be known (using updated values). This procedure leads to a system of coupled linear nonhomogeneous equations which are solved by Gaussian elimination and back-substitution.

The direction (rotational or radial) in which the line inversion is performed depends on the geometry and on the boundary conditions at the rotational boundaries. Line inversion is performed in the rotational direction for all R-θ-Z problems and for X-Y-Z problems with periodic boundary conditions. For other X-Y-Z problems, the line inversion is performed in the direction containing the most mesh points.

After each horizontal flux profile, ϕ_i, for the ith R-θ iteration is calculated, a new profile, ϕ_i', is computed by magnifying the difference between ϕ_i and ϕ_{i-1} according to

$$\phi_i' = \phi_i + \beta(\phi_i - \phi_{i-1}) \quad , \tag{16}$$

where β is the overrelaxation factor specified in the input. The code automatically reduces β - 1 by a factor of 1.1 when $|1 - \lambda| < 10EPS$ and also computes the fission source overrelaxation factor, β', from the expression

$$\beta' = 1.0 + 0.6(\beta - 1) \quad . \tag{17}$$

Tight mesh spacing in the dimension perpendicular to line inversion can cause excessive running time. Thus, if tight mesh spacing is used, it should be in the dimension containing the most mesh intervals. For the same reason, the dummy dimension in two-dimensional problems should contain large mesh intervals (at least three intervals are required).

IV. IMPLICIT EIGENVALUE SEARCHES

The 3DDT code permits implicit eigenvalue searches for time absorption (alpha), material composition (concentration), or system dimensions (delta). In contrast to a k_{eff} calculation, the fission spectrum is not changed. Instead, the desired parameter is changed to make λ approach unity. In general terms, a converged value of λ is obtained by a sequence of outer iterations for the initial system configuration. Then the system is altered, by changing the desired parameter by an amount specified in the input, and another sequence of outer iterations is performed to obtain a second converged λ. Subsequent parameter changes are determined by either linear interpolation or by parabolic interpolation modified by precautionary safeguards. Eigenvalue search problems are thus basically a sequence of k_{eff} calculations for several perturbations of the original system.

The outer iteration process for the original system (and corresponding initial eigenvalue guess) is continued until $|\lambda_j - \lambda_{j-1}| < EPS$, where j is the outer iteration index and EPS is the lambda convergence criterion specified in the input. The original eigenvalue guess, EV, is then changed to EV-EVM if $\lambda < 1$ and to EV+EVM if $\lambda > 1$. EVM is an input parameter (eigenvalue modifier) for changing the implicit parameter which is the object of the search, and an intelligent use of EVM can materially shorten computation time.

After converging on the first value of λ to a precision of $|\lambda_j - \lambda_{j-1}| < EPS$ for two successive outer iterations, subsequent values are converged to $|\lambda_j - \lambda_{j-1}| < EPSA$, where EPSA is the eigenvalue search convergence criterion specified in the input. In most computations, EPSA can be larger than EPS, saving time by requiring fewer outer iterations without sacrificing final accuracy. When the second

converged value of λ is obtained for the second value of EV, a straight-line interpolation is used to modify EV, provided that XLAL $\leq |1 - \lambda| \leq$ XLAH. XLAL and XLAH are low and high limits on $|1 - \lambda|$ specified in the input and used to stabilize the search. If $|1 - \lambda| >$ XLAH, the straight-line interpolation proceeds as though $|1 - \lambda|$ were equal to XLAH. If $|1 - \lambda| <$ XLAL, the search continues to completion using a straight-line interpolation with a fixed slope to prevent errors due to subtraction of nearly equal quantities. In all cases where straight-line interpolation is used, the slope of the line can be adjusted to either over- or underpredict by using the parameter oscillation damper, POD, specified in the input.

After a third converged value of λ (corresponding to the third value of EV) is obtained, and if $|1 - \lambda| \geq$ XLAL, parabolic interpolation is used to obtain the next value of EV. The root of the parabola closest to the previous value of EV is taken as EV. Let λ^P and λ^{PP} be the converged lambdas corresponding to EV^P and EV^{PP}, where EV^P is the previous eigenvalue and EV^{PP} is two eigenvalues back. If the sign of $\lambda^{PP} - 1$ is different from the sign of $\lambda^P - 1$, the new value of EV must lie in the extreme range of the previous values E^P and E^{PP}. If it does not, EV is set equal to $0.5(EV^P + EV^{PP})$. In the parabolic search, a slope is computed for the switch to the straight-line method if $|1 - \lambda| <$ XLAL. Also, if the two roots of the parabola are imaginary, the straight-line method is used. Final convergence of the search is reached when both $|1 - \lambda| <$ EPS and $|\lambda_j - \lambda_{j-1}| <$ EPS.

Alpha Searches. Consider the time-dependent form of Eq. (1),

$$\frac{1}{v_g} \frac{\partial \phi_g(\vec{r},t)}{\partial t} = \nabla \cdot D_g \nabla \phi_g(\vec{r},t) - \Sigma_g^r \phi_g(\vec{r},t) + S_g(\vec{r},t) \quad . \tag{18}$$

If we assume that

$$\phi_g(\vec{r},t) = \phi_g(\vec{r})\, e^{\alpha t} \quad , \tag{19}$$

Eq. (16) becomes

$$\nabla \cdot D_g \nabla \phi_g(\vec{r}) - \left(\Sigma_g^r + \frac{\alpha}{v_g}\right) \phi_g(\vec{r}) + S_g(\vec{r}) = 0 \quad . \tag{20}$$

The parameter α as defined in Eq. (19) is computed as the eigenvalue EV in an alpha calculation. Because the term α/v_g in Eq. (20) appears as an additional absorption term, alpha calculations are referred to as time absorption calculations.

Concentration Searches. Any number of materials can simultaneously be added, depleted, or interchanged in any number of zones during a concentration search. The basic format for specifying concentration searches is illustrated by a simple example. Suppose that mixture 15 is initially composed of materials 1, 2, 3, and 4 with atom densities, respectively, of N_1, N_2, N_3, and N_4. Now suppose that we wish to vary the atom densities of materials 1 and 2 by the same factor in order to make the system critical, while at the same time keeping the atom densities of materials 3 and 4 constant. The I0, I1, and I2 tables (see input instructions, Appendix A) for mixture 15 would then be specified as shown in the following tabulation.

Mix Number (I0)	Material Number (I1)	Atom Density (I2)
15	0	0
15	1	N_1
15	2	N_2
15	15	0
15	3	N_3
15	4	N_4

In the first row, the 0 entry in the I1 table instructs the code to clear a storage area for mixture 15. In the second and third rows, the entries in the I1 table cause materials 1 and 2 to be added to the current contents of mixture 15 with atom densities, respectively, of N_1 and N_2. Because the entry in the I1 table in the fourth row is the same as the mixture number, the current contents of mixture 15 is multiplied by the eigenvalue. Finally, the entries in the I1 table in the last two rows instruct the code to add materials 3 and 4, with atom densities, respectively, of N_3 and N_4, to the current contents of mixture 15. These instructions are summarized by the expression.

$$\Sigma_{15} = EV(N_1\sigma_1 + N_2\sigma_2) + N_3\sigma_3 + N_4\sigma_4 \quad , \tag{21}$$

where

Σ_{15} = macroscopic cross section for mixture 15,
σ_i = microscopic cross section for material i,
N_i = atom density of material i, and
EV = eigenvalue.

From the simple example above as a basis, complex concentration search problems can be constructed; the possibilities are limited only by the ingenuity of the user.

Dimension Searches. In delta calculations, the code searches on reactor dimensions by varying the size of each mesh interval according to

$$\Delta r^j = \Delta r_o^j [1 + (\text{mesh modifier})^j EV] \quad . \tag{22}$$

In Eq. (22), Δr_o^j is the initial mesh spacing for the jth interval and EV is the eigenvalue. Different mesh modifiers can be specified for each radial, rotational, and axial mesh interval. This allows great versatility in the manner in which the system can be changed to achieve criticality.

In the concentration and delta options, either k_{eff} or alpha can be used as parametric eigenvalues. That is, concentration or dimension searches can be made so that the final system has a specified reactivity or a specified alpha. If no parametric eigenvalue is specified, it is assumed that the final system is to be critical.

V. BURNUP MODEL

The burnup equation for each material in each zone has the form

$$dN_i/dt = \lambda_k N_k + \bar{\Phi} \sum_{j=1}^{2} \bar{\sigma}_j^c N_j + \bar{\Phi} \sum_{m=1}^{7} \bar{\sigma}_m^f N_m - \lambda_i N_i - \bar{\Phi} \bar{\sigma}_i^a N_i \quad , \tag{23}$$

where

N_i = atom density of nuclide i in the zone,

λ_i = decay constant for nuclide i,

$\bar{\sigma}_i^a$ = spectrum-averaged microscopic absorption cross section for nuclide i,

$\bar{\sigma}_j^c$ = spectrum-averaged microscopic capture cross section for nuclide j,

$\bar{\sigma}_m^f$ = spectrum-averaged microscopic fission cross section for nuclide m, and

$\bar{\Phi}$ = total zone-averaged flux.

The first term on the right-hand side of Eq. (23) gives the source for nuclide i from decay of nuclide k. The next two terms provide for two capture and seven fission sources. Since fission products are usually included as a single nuclide, the yield of nuclide i from the fission of nuclide m has been assumed to be unity in Eq. (23). Modifications to the code required to allow fission yields for individual fission products are straightforward. The last two terms in Eq. (23) provide for losses of nuclide i by decay and absorption.

The zone-averaged flux and cross sections appearing in Eq. (23) are computed and printed before each burnup interval and, along with the total reactor power and flux profiles, are held constant during the burnup interval. Each burnup interval is arbitrarily subdivided into ten smaller intervals of equal duration. Equation (23) is then solved as a march-out problem using the smaller time intervals.

If Eq. (23) is rewritten in the form

$$d\vec{N}/dt = \vec{f}(\vec{N},t) \quad , \tag{24}$$

the march-out algorithm can be written as

$$\vec{N}_J = \vec{N}_{J-1} + \frac{\delta t}{2}(\vec{f}_{J-1} + \vec{f}_J) \tag{25}$$

where J is the time index and δt is the subdivided time interval. Because $\vec{N}_J$ must be known in order to compute $\vec{f}_J$, Eq. (25) must be solved by an iterative procedure at each time step J. The algorithm used is

$$\vec{N}_J^{\nu} = \vec{N}_{J-1} + \frac{\delta t}{2}\left(\vec{f}_{J-1} + \vec{f}_J^{\nu-1}\right) \quad , \tag{26}$$

where ν is the iteration index. It is clear from the mathematical model that short burnup intervals should be used if rapid variations in isotopic concentrations or flux profiles are expected.

Although the eigenvalue and material densities for the depleted system are computed and printed after each burnup interval, the zone-averaged flux, cross sections, and reaction rates are not. However, they can be obtained by specifying a final burnup interval of minuscule length. The same stratagem can be used in nonburnup problems to obtain a printout of these quantities.

REFERENCES

1. W. W. Little, Jr. and R. W. Hardie, "2DB User's Manual," BNWL-831, Battelle Northwest Laboratory (1968).
2. K. D. Lathrop, "DTF-IV, a FORTRAN-IV Program for Solving the Multigroup Transport Equation with Anisotropic Scattering," LA-3373, Los Alamos Scientific Laboratory (1965).
3. 2DF is an unpublished, two-dimensional version of the DTF-IV code developed at the Los Alamos Scientific Laboratory.

APPENDIX A

INPUT INSTRUCTIONS

In the following pages, input specifications for 3DDT are listed and described in exactly the order in which they are required by the code. The input is divided into four categories:

1. a title card,
2. input control integers and input control floating point numbers intermixed on Cards 2 through 9,
3. problem-dependent data (number of cards is variable), and
4. burnup data (number of cards is variable).

The formats developed for reading problem-dependent data in the DTF-IV code are also used in 3DDT. With the exception of the cross sections, all problem-dependent data are read by generalized input subroutines in one of two formats: 6(I1,I2,E9.4) for reading floating point numbers and 6(I1,I2,I9) for reading integers. In these formats, the integer in the first column (I1) indicates the option (described below), the integer in the next two columns (I2) indicates the number of times the option is to be applied, and the number in the last nine columns (I9 or E9.4) is the data associated with the field. The options for I1 are:

I1	Option
0 (or blank)	Code reads data field and no special action is taken.
1	Repeat the number in the data field I2 times.
2	Place I2 linear interpolates between the number in this data field and the number in the following data field (not allowed for integers).
3	Terminate reading of the data block. A 3 must follow the last data field of each data block.
4	Fill the remainder of the data block with the number in the data field.
5	Repeat the number in the data field 10 x I2 times.
9	Indicates the end of data to be read from the card and code skips to the next card. This option allows insertions of data within a block without repunching the entire block.

Both the 2DB and the DTF-IV cross-section formats are allowed in 3DDT. Algorithms for mixing cross sections and for criticality searches in k_{eff}, alpha, concentration, and delta calculations are the same as those used in the DTF-IV and 2DB codes.

Word	Variable	Format	Comments
Card 1 (required)			
A11	ID	12A6	Problem identification card which may contain any alphanumeric characters desired.
CONTROL DATA (required)			
Card 2			
1	A01	I12	Cross-section format indicator (1/2 = BNWL/LASL). See explanatory notes.
2	A02	I12	Theory (0/1 = regular/adjoint). Flux guess for adjoint problem must be input in reverse order in terms of groups. Adjoint fluxes are also printed in reverse order. The neutron balance tables, power density, and fission source rate in adjoint calculations do not have a direct physical interpretation.
3	IGE	I12	Geometry (0/1 = X-Y-Z/R-θ-Z). Input for θ is in revolutions, e.g., π radians = 0.5 revolution.
4	IZM	I12	Number of material zones.
5	I04	I12	Eigenvalue type (1/2/3/4 = k/α/C/δ).
6	M07	I12	Initial flux guess (0/1,2,3/4/5 = flat/cards/tape/sine-cosine). See input block N0. If M07=4, the flux tape must be assigned to file TAPE14.

Word	Variable	Format	Comments
Card 3			
1	IM	I12	Number of radial (or X) intervals ($\geq$3).
2	JM	I12	Number of rotational (or Y) intervals ($\geq$3).
3	KM	I12	Number of axial (Z) intervals ($\geq$3).
4	EV	E12.4	Initial eigenvalue guess (typical values are 1.0 for C calculations and 0.0 for all the rest).
5	EVM	E12.4	Eigenvalue modifier used in search calculations. Typical values are $\pm$1.0 for α, $\pm$0.1 for C, and $\pm$0.05 for δ. Value of EVM should reduce reactivity.
6	EPS	E12.4	Lambda convergence criterion, i.e., convergence criterion on the total fission source. Typical values are 0.00001 $\leq$ EPS $\leq$ 0.0001.
Card 4			
1	BO1	I12	Left boundary condition (0/1 = vacuum/reflective).
2	BO2	I12	Right boundary condition (see BO1).
3	BO3	I12	Front boundary condition (0/1/2 = vacuum/reflective/periodic).
4	BO4	L12	Back boundary condition (see BO3).
5	BO5	I12	Bottom boundary condition (0/1 = vacuum/reflective).
6	BO6	I12	Top boundary condition (see BO5).
Card 5			
1	MT	I12	Total number of materials including mixtures. Mixtures must be assigned identification numbers (see IO block) between MCR+1 and MT.
2	MO1	I12	Number of mixture specifications (>0 for burnup calculations). This is the length of the blocks (see IO, I1, and I2) which specify how mixtures are to be formed from the input cross sections.
3	MCR	I12	Number of cross-section sets input from cards ($\geq$1). The sets are assigned identification numbers by the code from 1 to MCR in the order in which they are read.
4	IZ	I12	Number of radial (or X) mesh interval modifiers ($\geq$1 for δ option, 0 otherwise). See R3 block.
5	JZ	I12	Number of rotational (or Y) mesh interval modifiers ($\geq$1 for δ option, 0 otherwise). See TA3 block.
6	KZ	I12	Number of axial (Z) mesh interval modifiers ($\geq$1 for δ option, 0 otherwise). See Z3 block.
Card 6			
1	SO2	I12	Parametric eigenvalue type (0/1/2 = none/k/α). Use with C and δ options only.
2	SO3	E12.4	Parametric eigenvalue (leave blank or zero if SO2 = 0).
3	IGM	I12	Number of energy groups ($\geq$1).
4	IHT	I12	Position of sigma transport in cross-section table.
5	IHS	I12	Position of sigma self-scatter in cross-section table.
6	ITL	I12	Cross-section table length.

Word	Variable	Format	Comments
Card 7			
1	S01	E12.4	Neutron source rate (S01 > 0) or power in MWT (S01 < 0). Used to normalize the fluxes.
2	M05	I12	R-θ iteration reduction factor. The maximum number of R-θ (or X-Y) mesh sweeps per inner (Z) iteration is set equal to S04/M05 or G07/M05 as appropriate. Suggested value M05 = 2.
3	M06	I12	Number of R-θ (or X-Y) planes with unique zone numbers ($1 \leq$ M06 $\leq$ KM).
4	S04	I12	Inner (Z) iteration maximum per group for $\lvert 1 - \lambda \rvert >$ 10xEPS (suggested value $5 \leq$ S04 ≤ 10).
5	D05	I12	Maximum number of outer iterations (if running time limitation is object, use ITIMOF).
6	G07	I12	Maximum number of inner (Z) iterations per group when $\lvert 1 - \lambda \rvert <$ 10xEPS (suggested value $10 \leq$ G07 ≤ 20).
Card 8			
1	G05	E12.4	Not used at present--leave blank or zero.
2	G06	E12.4	Inner iteration pointwise flux convergence criterion. Suggested value EPS $\leq$ G06 $\leq$ 10xEPS. G06 cannot be zero.
3	LAL	E12.4	Lower limit on $\lvert 1 - \lambda \rvert$ used in search options only. Suggested value: 0.005.
4	LAH	E12.4	Upper limit on $\lvert 1 - \lambda \rvert$ used in search options only. Suggested value: 0.5.
5	POD	E12.4	Parameter oscillation damper used in search options only. Suggested values: 0.5 for α calculation, 1.0 otherwise.
6	EPSA	E12.4	Eigenvalue search convergence criterion. Used only in search calculations. Suggested value EPS $\leq$ EPSA $\leq$ 10xEPS.
Card 9			
1	IPFLX	I12	Punch flux dump (0/1 = yes/no). Not recommended for IMxJMxKMxIGM > 6000, instead use IDMTPS. If a dump is called for in a burnup calculation, only the fluxes computed for the undepleted system are dumped. Adjoint fluxes are punched in reverse order in terms of groups.
2	IPCUR	I12	Punch atom densities after each burnup interval (0/1 = no/yes).
3	IDMTPS	I12	Write flux dump on magnetic tape (0/1 = yes/no). If yes, must assign a magnetic tape to file TAPE16. Adjoint fluxes are written in reverse order in terms of groups. In burnup calculations, only the fluxes computed for the undepleted system are dumped.
4	ITIMOF	I12	Time limit in seconds. For long running problems, this allows a flux dump to be taken before CP time expires.
5	ORF	E12.4	Overrelaxation factor. Suggested value: 1.4.
6	NESFL	I12	ECS field length in octal thousands. Must be the same as that requested on the job card.

PROBLEM-DEPENDENT DATA

Block Name	Format	Number of Entries	Comments
CO (required)	6E12.5	MCR	Cross-section sets on cards where MCR is the number of sets. The first card in each set is the heading card containing HOLN, ATW, ALAM, AA(9) (format A6, 2E6.2, 9A6) where HOLN = isotope identification name, ATW = atomic weight (amu) of isotope, and AA(9) = miscellaneous additional identification. The heading card is followed by the cross-section tables (in barns) for each group beginning with the highest energy group. For A01=1, the table for each group starts on a new card. For A01=2, the cross sections are a continuous block. If A01=2 and IHT=3, the last set of cross sections is followed by ANU(I), I=1,IGM where ANU(I) is the value of ν for group I. The order of the various interaction cross sections within the table is discussed in the explanatory notes.
NO (optional)	6(I1,I2,E9.4)	Varies	Flux input. The length of this block depends on the option chosen in parameter M07 (card 2) as follows: M07 Option — Length 0 — No input required. 1 — IM+JM+KM+IGM 2 — IGM(IM+JM+KM) 3 — IGMxIMxJMxKM 4 — Same as M07=3 but flux guess is taken from tape. The magnetic tape containing the flux guess must be assigned to file TAPE14. 5 — Sine or cosine guess computed internally by subroutine SINUS. Card input not required at this point but see block EF. See explanatory notes for further details on flux input.
RO (required)	6(I1,I2,E9.4)	IM+1	Radial (X) mesh in cm. The entries must be ordered by magnitude and must begin with 0.0 for R-θ-Z problems
TAO (required)	6(I1,I2,E9.4)	JM+1	Rotational (Y) mesh in revolutions (or cm) ordered by magnitude.
ZO (required)	6(I1,I2,E9.4)	KM+1	Axial (Z) mesh in cm ordered by magnitude.
EF (optional)	6(I1,I2,E9.4)	IGM	Flux energy spectrum to be read only if M07=5. See explanatory notes.
MO (required)	6(I1,I2,I9)	M06xIMxJM	Zone number blocks for each of the M06 unique R-θ (X-Y) planes. Each block contains IMxJM entries. The zone numbers for all intervals in the radial (X) direction must be given in order from left to right for the first rotational (Y) interval, then for the second rotational interval, and so forth until the zone numbers for the entire plane have been specified.
IDZNO (required)	6(I1,I2,I9)	KM	Identifies zone number plane to be used for each axial interval starting with the bottom interval.
M2 (required)	6(I1,I2,I9)	IZM	Material numbers by zone starting with zone 1.
K7 (required)	6(I1,I2,E9.4)	IGM	Fission spectrum ordered by group beginning with the highest energy group.

PROBLEM-DEPENDENT DATA (continued)

Block Name	Format	Number of Entries	Comments
V7 (required)	6(I1,I2,E9.4)	IGM	Velocities (cm/sec) for each group starting with the highest energy group.
IO (optional)	6(I1,I2,I9)	M01	Mixture numbers labeling the cross-section mixture blocks. The length of each mixture block is n+1 where n is the number of isotopes in the mix. No input is required if M01=0.
I1 (optional)	6(I1,I2,I9)	M01	Mixture commands indicating which isotopes are to be used to make each mixture. The first entry for each mix is 0. Once a mixture has been defined, it may be used as a component of another mixture. However, the material inventory tables, which are part of the printed output, are inapplicable for a mixture specification more complex than a mix in a mix (e.g., a mix in a mix in a mix). An isotope cannot be specified more than once in the same mix in burnup calculations. If specified more than once in other calculations, the printed inventory table will be incorrect. The procedure used in concentration search problems is discussed in Sec. IV of this report. No input is required for I1 if M01=0.
I2 (optional)	6(I1,I2,E9.4)	M01	Atomic densities (x 10^{24} since input cross sections are assumed to be in barns) of the various components of each mixture. The first entry for each mixture must be 0.0, corresponding to the 0 in the I1 table, followed by the density for each material in the order they are given in the I1 table. No input required if M01=0. See Sec. IV of this report for procedure used in concentration searches.
R2 (optional)	6(I1,I2,I9)	IM	Radial numbers. These are read and used only in δ calculations. They indicate which radial mesh interval modifier (block R3) is to be used for each radial (or X) interval.
R3 (optional)	6(I1,I2,E9.4)	IZ	Radial mesh interval modifiers. These are the factors used with the eigenvalue to achieve the increase or decrease in size of the radial (or X) mesh intervals. A different modifier may be specified for each mesh interval. This block is read only in δ calculations.
TA2 (optional)	6(I1,I2,I9)	JM	Rotational numbers. These are used in the same manner as the R2 block except in the θ (or Y) direction.
TA3 (optional)	6(I1,I2,E9.4)	JZ	Rotational mesh interval modifiers. These are used in the same manner as the R3 block except in the θ (or Y) direction.
Z2 (optional)	6(I1,I2,I9)	KM	Axial numbers. These are used in the same manner as the R2 block except in the axial (Z) direction.
Z3 (optional)	6(I1,I2,E9.4)	KZ	Axial mesh interval modifiers. These are used in the same manner as the R3 block except in the axial (Z) direction.

BURNUP DATA

Word	Variable	Format	Comments
Card 1 (required)			
1	NCON	I6	Burnup control: = 0: end of problem, read input data for next case. The remaining words on the card are ignored. This card, with NCON=0, must be the last card in the data deck for each problem. = N: read burnup parameters for N burnable isotopes and take time step of DELT. Card 2 below is read only if this option is used. < 0: take time step of DELT using burnup parameters from previous time step. If this option is used, Card 2 below is not required.
2	NPRT	I6	Print control: = 0: partial print. Fluxes, fission densities, and fission neutron source rates are not printed for the depleted system. = 1: full print. Quantities normally printed after an eigenvalue calculation are printed for the depleted system.
3	DELT	E12.0	Length (days) of time step (burnup interval).
Card 2 (optional--repeat for all burnable isotopes, i.e., N=1,NCON)			
1	MATN(N)	I6	Material number of the burnable isotope.
2	NBR(N)	I6	Control for breeding ratio calculation: = 0: no effect = 1: fertile isotope = 2: fissile isotope
3	LD(N)	I6	Decay source control: = 0: no decay source = I: decay source from burnable isotope I
4	LCN(N,1)	I6	Capture source #1: = 0: no capture source = I: capture source from burnable isotope I
5	LCN(N,2)	I6	Capture source #2: Same options as LCN(N,1).
6	LFN(N,1)	I6	Fission source #1: = 0: no fission source = I: fission source from burnable isotope I
.			
.			
.			
12	LFN(N,7)	I6	Fission source #7: Same options as LFN(N,1).

EXPLANATORY NOTES

Cross Sections. If control parameter A01=1, the cross-section tables are read in the BNWL format. In this format, the cross sections are assumed to be in the order σ_g^f, σ_g^a, $\nu\sigma_g^f$, σ_g^{tr}, $\sigma_{g\to g}$, $\sigma_{g-1\to g}$, $\sigma_{g-2\to g}$, ..., and the table for each group starts on a new card. In the LASL format (A01=2), the cross sections are either in the order σ_g^c, σ_g^f, σ_g^s, σ_g^a, $\nu\sigma_g^f$, σ_g^{tr}, $\sigma_{g\to g}$, $\sigma_{g-1\to g}$, $\sigma_{g-2\to g}$, ..., or in the order σ_g^a, $\nu\sigma_g^f$, σ_g^{tr}, $\sigma_{g\to g}$, $\sigma_{g-1\to g}$, $\sigma_{g-2\to g}$, ..., and the cross sections are read in a continuous block.

The code checks the cross-section tables for internal consistency. That is, the transport cross section computed from

$$\sigma_g^{tr} = \sigma_g^a + \sum_{g'} \sigma_{g\to g'} \qquad \text{(A-1)}$$

must agree with the σ_g^{tr} specified in the table. If they differ by more than EPS in relative magnitude, either the problem is terminated or a warning is printed, depending on the magnitude of the discrepancy.

Flux Guess. Let $\phi(G,I,J,K)$ denote the flux for group G at radial (or X) mesh point I, rotational (or Y) mesh point J, and axial (Z) mesh point K. If M07=0, the guess

$$\phi(G,I,J,K) = 1.0 \qquad (A-2)$$

is used for all groups and all mesh points. This option is recommended only for cell problems in which all the boundaries are reflected and the energy spectrum is not known. For other problems, option M07=5 should be used if a flux guess from other sources is not available.

If M07=1, the flux guess is synthesized from

$$\phi(G,I,J,K) = X(I)Y(J)Z(K)H(G), \qquad (A-3)$$

where X(I), Y(J), Z(K), and H(G) are, respectively, the radial, rotational, axial, and energy distributions. These distributions can be obtained from one-dimensional calculations using, for example, the DTF-IV code. This flux guess is effective for problems which are nearly separable in both space and energy. The one-dimensional distributions are read from cards as separate blocks in the order X(I), I=1,IM; Y(J), J=1,JM; Z(K), K=1,KM; and H(G), G=1, IGM.

If M07=2, the flux guess is synthesized from

$$\phi(G,I,J,K) = X(G,I)Y(G,J)Z(G,K) \quad , \qquad (A-4)$$

where X(G,I), Y(G,J), and Z(G,K) are, respectively, the group-dependent radial, rotational, and axial distributions. As before, these distributions can be obtained from one-dimensional calculations. This flux guess is effective for problems which are nearly separable in space but not in energy. The distributions are read from cards as separate blocks in the order X(G,I), I=1,IM; Y(G,J), J=1,JM; and Z(G,K), K=1,KM for each group starting with G=1 for regular problems and G=IGM for adjoint problems.

If M07=3, a full flux guess $\phi(G,I,J,K)$ is read from cards. The fluxes are read in KM blocks of length IMxJM in the order

((φ(G,I,J,1), I=1,IM), J=1,JM)
((φ(G,I,J,2), I=1,IM), J=1,JM)
•
•
•
((φ(G,I,J,KM), I=1,IM), J=1,JM)

for each group starting with G=1 in regular problems or G=IGM in adjoint problems. Normally, this guess will be a card flux dump from a previous run and the blocks will already be in the correct order.

The flux guess for M07=4 is the same as for M07=3 except that the fluxes are on magnetic tape rather than on cards. This guess is normally a tape flux dump from a previous run.

If M07=5, the flux guess is synthesized in the same manner as the M07=1 option, Eq. (A-3). However, the one-dimensional spatial distributions X(I), Y(J), and Z(K) are computed internally by subroutine SINUS from sine, cosine, or flat functions depending on the boundary conditions. The energy distribution H(G) (block EF in the input specifications) is read from cards.

APPENDIX B

STORAGE REQUIREMENTS

The variable-dimensioned arrays in 3DDT are stored in three levels. Four-dimensional arrays, e.g., $\phi(x,y,z,g)$, are stored on disk; three-dimensional arrays, e.g., $\phi(x,y,z)$ for a particular energy group, are stored in the ECS; and two-dimensional arrays, e.g., $\phi(x,y)$ for a particular energy group and axial position, are stored in a container block in the fast central memory. Thus, central memory storage requirements are insensitive to the number of energy groups and the number of axial mesh points. Three levels of storage are required because the combined storage capacities of the fast core and the ECS are not large enough for most problems.

On the CDC 6600 computer, disk files are treated the same as tape files. That is, they may be written, rewound; read, and backspaced by the standard FORTRAN I/O statements. In 3DDT, disk files are used to store fluxes (file NFLUX1), flux constants (file NCXS1), and cross sections (file NCR1). An additional disk file, NSCRAT, is used as a scratch file.

Both random access and sequential file access can be used to transfer arrays between fast core and the ECS. Random ECS access permits the manipulation of data arrays through high-speed block transfers. Sequential ECS file access permits tape file simulation to be employed using ECS as the storage medium. For each read or write statement, the time required to transfer n words between fast core and ECS is given approximately by

$$t = a + n/b, \qquad \text{(B-1)}$$

where a = access time in seconds and b = transmission rate in words/sec. With random access, $a \cong 1.5 \times 10^{-5}$ and $b \cong 6.7 \times 10^{6}$; whereas with sequential access, $a \cong 8.0 \times 10^{-3}$ and $b \cong 6.7 \times 10^{6}$. Although the transmission rates are the same for the random and sequential modes, the much larger access time for the sequential mode greatly reduces the effective transfer rate.

The effective transfer rate, R, is given by

$$R = n/t = n/(a + n/b). \qquad \text{(B-2)}$$

Equation (B-2) shows that R increases linearly with n for small n and approaches the transmission rate, b, for large n. Effective transfer rates computed from Eq. (B-2) for the two ECS modes are tabulated below for various values of n.

	Effective Transfer Rate (words/sec)	
n	Random Access	Sequential Access
10	6.1×10^{5}	1.2×10^{3}
100	3.3×10^{6}	1.2×10^{4}
1000	6.1×10^{6}	1.2×10^{5}
10000	6.6×10^{6}	1.1×10^{6}

Since the arrays transferred between fast core and ECS are of the order of IMxJM, where IM = number of radial (or X) mesh points and JM = number of rotational (or Y) mesh points, n is of the order of 1000 in most problems. The effective transfer rate for n = 1000 using random access is 50 times larger than that using sequential access. For this reason, random access is used in the CDC 6600 version of 3DDT.

The use of sequential file access would make 3DDT compatible with computing systems for which ECS is not available. Thus, it is expected that a version using sequential ECS file access will be prepared later. Disk storage could be used in place of the ECS, but only at considerable cost in computing time. The effective transfer rate between fast core and disk is at least two orders of magnitude smaller than that between fast core and the ECS using random access. The use of magnetic tape storage is even less desirable, because effective transfer rates with magnetic tape are several times smaller than with disk.

The three-tier storage arrangement is well suited to the iteration scheme used in 3DDT. During an outer iteration, the three-dimensional arrays for the current group are extracted from the disk and stored in the ECS before entering the inner iteration loop. In the inner iteration loop, the two-dimensional arrays for the current axial position are transferred from the ECS to central memory. Since the two-dimensional arrays must be transferred from the ECS to central memory every time the axial position changes, and since the axial mesh may be swept many times for every outer iteration, most of the data transmission is between ECS and central memory. Thus, disk access time and transmission rates are not as critical as those for the ECS.

The variable-dimensioned arrays stored in the container block A in central memory require N_{cm} storage locations, where

$$\begin{aligned} N_{cm} = {} & 17\text{xIMxJM} + \text{ITLxMT} + 15\text{xML} + 2\text{xJMxKM} + 2\text{xIMxKM} \\ & + 4\text{xM01} + 6\text{xIGM} + 8\text{xIZM} + 2(\text{IP+JP+KP}) \\ & + 2(\text{IM+JM+KM}) + 4\text{xML} + 12\text{xIGP} + \text{M06} + 11\text{xKM} \\ & + 2\text{xMAX(IM,JM)} + \text{T06(IM+JM+KM+IZ+JZ+KZ)}. \end{aligned} \qquad \text{(B-3)}$$

Extended core storage and disk storage requirements are, respectively,

$$\begin{aligned} N_{ecs} = {} & 10\text{xIMxJMxKM} + \text{IMxJMxM06} \\ & + \text{IGM(JMxKM+IMxKM+IMxJM)} + 4\text{xMLxIZM} \end{aligned} \qquad \text{(B-4)}$$

and

$$N_{disk} = 6\text{xIMxJMxKMxIGM} + \text{ITLxMTxIGM}. \qquad \text{(B-5)}$$

In Eqs. (B-3) through B-5),

IM = number of radial (or X) mesh intervals,
JM = number of rotational (or Y) mesh intervals,
KM = number of axial (Z) mesh intervals,
ITL = cross-section table length,
MT = total number of materials including mixes,
ML = number of input material cross sections,
M01 = number of mixture specifications,
IGM = number of energy groups,

IP = IM+1,

JP = JM+1,

KP = KM+1,

IGP = IGM+1,

IZM = number of material zones,

IZ = number of radial (X) zones to be modified (delta option),

JZ = number of rotational (Y) zones to be modified (delta option),

KZ = number of axial (Z) zones to be modified (delta option),

M06 = number of R-θ (X-Y) planes with unique zone numbers, and

T06 = 1 for delta calculation, = 0 otherwise.

For a fairly large problem, in which IM=JM=KM=M06=IZ=JZ=KZ=30, IGM = 16, ITL = 12, MT = 100, ML = 20, M01 = 200, T06 = 1, and IZM = 80, the storage requirements for the variable arrays are

N_{cm} = 23,186,

N_{ecs} = 340,200,

N_{disk} = 2,611,200.

On a 65K machine, the dimension of the container block A can be as large as 25,000. The maximum ECS memory available to a single user is currently about 800,000 and each machine has access to two disks of about 6,500,000 words each. Thus, the large problem specified above can be accommodated on a 65K machine and much larger problems can be accommodated on a 130K machine. Because of the manner in which arrays are stored in central memory, very large two-dimensional (R-Z or X-Z) problems can be accommodated on a 65K machine. For example, consider an R-Z problem with IM=KM=M06=IZ=KZ=75, IGM = 25, ITL = 15, MT = 200, ML = 40, M01 = 400, IZM = 160, and T06 = 1. In the dummy direction, θ, JM = 3 (at least three mesh points are required in each dimension) and JZ = 0. For this case, the storage requirements are

N_{cm} = 24,598,

N_{ecs} = 337,500,

N_{disk} = 2,606,250.

APPENDIX C

SIMPLIFIED LOGICAL FLOW CHART

A simplified logical flow chart for 3DDT is shown in Fig. C-1. Only external (nonsystem) subroutines are included in the flow chart and a brief description of these subroutines is given below.

Subroutine	Description
3DDT	Main program--controls the overall flow of the problem. 3DDT calls INP, INIT, FISCAL, S8830, ERRO2, CONSTS, OUTER, CNNP, S8850, GRAM, INPB, AVERAG, and MARCH.
INP	Controls the reading and printing of all input data other than the burnup data and computes program constants and variable-dimension pointers. INP is called by 3DDT and calls S860, S862, REAG2, REAI2, SINUS, MAPR, ERRO2, and POINTR.
ERRO2	This subroutine prints error messages and is called by 3DDT, INP, S860, INIT, and CNNP.
POINTR	Calculates pointers for arrays in ECS. POINTR is called by INP.
RETRVR	Retrieves integer data from the container block A. RETRVR is called by INP.
S860	Reads cross sections from cards and checks them for consistency, performs adjoint reversals of the cross sections if required, and writes the cross-section tape. S860 is called by INP and calls ERRO2.
S862	Reads input flux guess and prepares a flux tape. It is called by INP and calls REAG2.
SINUS	Subroutine to calculate flux input guess. It is called by INP and calls REAG2.
REAG2	Intermediate subroutine used to read floating-point data. REAG2 is called by INP, SINUS, and S862 and calls LOAD.
REAI2	Intermediate subroutine used to read integer data. REAI2 is called by INP and calls LOAD.
LOAD	Reads either integer or floating-point data in the DTF-IV format. LOAD is called by REAG2 and REAI2.
MAPR	Produces a picture plot by zone and material. MAPR is called by INP.

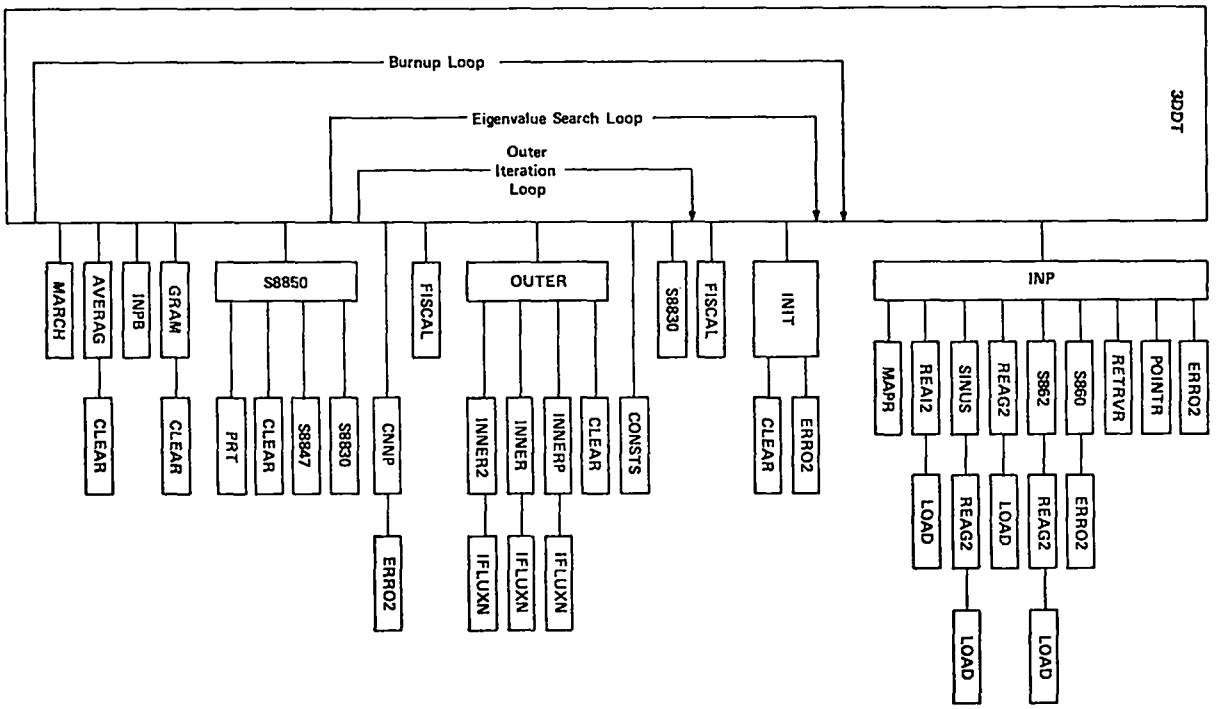

Fig. C-1. Simplified logical flow chart.

Subroutine	Description
INIT	Performs adjoint reversals of velocities and fission fractions, mixes cross sections, modifies geometry, calculates areas and volumes, and calculates fission neutrons. INIT is called by 3DDT and calls CLEAR and ERRO2.
CLEAR	Sets an array of a specified length equal to a given constant. It is called by INIT, OUTER, S8850, GRAM, and AVERAG.
FISCAL	Calculates fission sums and performs fission normalization. FISCAL is called by 3DDT.
S8830	Prints the monitor line after each outer iteration. It is called by 3DDT and S8850.
OUTER	Performs a complete outer iteration. OUTER calls INNER2, INNER, INNERP, and CLEAR and is called by 3DDT.
CONSTS	Calculates coefficients for the flux equation. CONSTS is called by 3DDT.
INNER2	Calculates the flux in a specified group when IM.GT.JM and IGE = 0. It is called by OUTER and calls IFLUXN.
INNER	Calculates the flux in a specified group when IM.LE.JM or IGE = 1. It is called by OUTER and calls IFLUXN.
INNERP	Calculates the flux in a specified group for periodic boundary conditions in the θ (or Y) direction. It is called by OUTER and calls IFLUXN.

Subroutine	Description
IFLUXN	Subroutine to normalize the fluxes before each group calculation. It is called by INNER, INNER2, and INNERP.
CNNP	Performs convergence tests, computes a new eigenvalue, and computes new parameters for search options. CNNP is called by 3DDT and calls ERRO2.
S8850	Prints the final monitor line, group fluxes, total flux, power density, and fission source rate and produces a flux dump on cards or tape. It is called by 3DDT and calls PRT, S8830, S8847, and CLEAR.
S8847	Computes and prints overall neutron balance table. It is called by S8850.
PRT	Subroutine to print any two-dimensional array. It is called by S8850.
GRAM	Calculates and prints the mass of each material in each zone and the zone volume. It is called by 3DDT and calls CLEAR.
INPB	Reads and prints the input burnup data. It is called by 3DDT.
AVERAG	Calculates one-group zone-averaged fluxes, fission cross sections, and absorption cross sections and the breeding ratio. It is called by 3DDT and calls CLEAR.
MARCH	Calculates the time-dependent isotopic concentrations. MARCH is called by 3DDT.

APPENDIX D

VARIABLE-DIMENSIONED ARRAYS
AND NONSUBSCRIPTED COMMON VARIABLES

The variable-dimensioned arrays in 3DDT are described in Table D-I. These arrays are stored in the container block A(25000). Nonsubscripted common variables are described in Table D-II. The tables are included for the benefit of those readers who may want to make changes or additions to 3DDT.

TABLE D-I

DESCRIPTION OF VARIABLE-DIMENSIONED ARRAYS

Variable (Dimension)	Description
AO(JM,KM)	Radial area elements for each rotational and axial mesh interval. For IGE=1, area elements do not include radius factor.
A1(IM,KM)	Rotational area elements for each radial and axial mesh interval.
A2(IM,JM)	Axial area elements for each radial and rotational mesh interval.
ALAM(ML)	Decay constants of the input materials.
ATW(ML)	Atomic weights of the input materials.
ANU(IGM)	Temporary storage for ν in S860. Stored in location LK6 in array A.
AXS(ML)	Spectrum-averaged absorption cross section for each input material for the current zone.
BRDT(IZM)	Breeding ratio by zone.
C(ITL,IGM,MT)	Temporary storage of cross sections by position in table, group, and material in subroutine S860. Storage starts at location LN2B in array A.
CO(ITL,MT)	Cross-section array for current group by position in table and material.
CXB(IM,KM)	Back boundary constants by radial and axial position for current group.
CXR(JM,KM)	Right boundary constants by rotational and axial position for current group.
CXS1(IM,JM)	Mesh volume left boundary constants by radial and rotational position for current group and axial position.
CXS2(IM,JM)	Mesh volume front boundary constants by radial and rotational position for current group and axial position.
CXS3(IM,JM)	Mesh volume bottom boundary constants by radial and rotational position for current group and axial position.
CXS3P(IM,JM)	Same as CXS3 but for plane above current axial position.
CXS4(IM,JM)	Mesh volume central constants by radial and rotational position for current group and axial position.
CXT(IM,JM)	Top boundary constants by radial and rotational position for current group.
EO(IGP)	Fission rate for each group, EO(I), and sum over all groups, EO(IGP).
E1(IGP)	Fission neutron source for each group, EO(I), and sum over all groups, E1(IGP).
E2(IGP)	Inscatter source for each group, E2(I), and sum over all groups, E2(IGP).
E3(IGP)	Outscatter from each group, E3(I), and sum over all groups, E3(IGP).
E4(IGP)	Absorptions in each group, E4(I), and sum over all groups, E4(IGP).
E5(IGP	Left boundary leakage for each group, E5(I), and sum over all groups, E5(IGP).

TABLE D-I (continued)

Variable (Dimension)	Description
E6(IGP)	Right boundary leakage for each group, E6(I), and sum over all groups, E6(IGP).
E7(IGP)	Front boundary leakage for each group, E7(I), and sum over all groups, E7(IGP).
E8(IGP)	Back boundary leakage for each group, E8(I), and sum over all groups, E8(IGP).
E9(IGP)	Bottom boundary leakage for each group, E9(I), and sum over all groups, E9(IGP).
E10(IGP)	Top boundary leakage for each group, E10(I), and sum over all groups, E10(IGP).
E11(IGP)	Total leakage for each group, E11(I), and sum over all groups, E11(IGP).
EF(IGM)	Temporary storage for group distribution of flux in S862 and SINUS. Stored at location LK6 in array A.
F0(IM,JM)	Fission rate (summed over groups) for previous outer iteration by radial and rotational position for current axial position.
F2(IM,JM)	Same as F0 but for current outer iteration.
FXS(ML)	Spectrum-averaged fission cross section for each input material and current zone.
HA(IM or JM)	Temporary storage for line inversion.
HOLN(ML)	Names of materials.
I0(M01)	Mix number table.
I1(M01)	Material number table.
I2(M01)	Atom density table.
I3(M01)	Atom density table for GRAM calculation.
IDZNO(KM)	Identifies zone number plane to be used for each axial position.
K(IM)	Temporary storage for radial material numbers in MAPR. Stored at location LC0 in array A.
K6(IGM)	Effective fission neutron spectrum.
K7(IGM)	Input fission neutron spectrum.
LAXS(IZM)	Locates array AXS(ML) in ECS for each zone.
LCN(ML,2)	Identifies source isotopes for capture in burnup calculations.
LCXB(IGM)	Locates array CXB(IM,KM) in ECS for each group.
LCXR(IGM)	Locates array CXR(JM,KM) in ECS for each group.
LCXS1(KM)	Locates array CXS1(IM,JM) in ECS for each axial position.
LCXS2(KM)	Locates array CXS2(IM,JM) in ECS for each axial position.
LCXS3(KM)	Locates array CXS3(IM,JM) in ECS for each axial position.
LCXS4(KM)	Locates array CXS4(IM,JM) in ECS for each axial position.
LCXT(IGM)	Locates array CXT(IM,JM) in ECS for each group.
LD(ML)	Identifies source isotopes for decay in burnup calculations.
LECS2(KM)	Locates array S2(IM,JM) in ECS for each axial position.
LFDEN0(KM)	Locates array F0(IM,JM) in ECS for each axial position.
LFDEN1(KM)	Locates array F2(IM,JM) in ECS for each axial position.
LFLX0(KM)	Locates array N0(IM,JM) in ECS for each axial position.
LFLX1(KM)	Locates array N2(IM,JM) in ECS for each axial position.
LFN(ML,7)	Identifies source isotopes for fission in burnup calculations.
LFXS(IZM)	Locates array FXS(ML) in ECS for each zone.
LIDZ(M06)	Locates array M0(IM,JM) in ECS for each unique zone number plane.
LMASS(IZM)	Locates array MASS(ML) in ECS for each zone.

TABLE D-I (continued)

Variable (Dimension)	Description
LMASSP(IZM)	Locates array MASSP(ML) in ECS for each zone.
LVOL(KM)	Locates array VO(IM,JM) in ECS for each axial position.
MO(IM,JM)	Zone numbers by radial and rotational position for current axial position.
M1(IM,JM)	Same as MO(IM,JM) but for plane below current axial position.
M2(IZM)	Material numbers by zone.
MASS(ML)	Current mass of each input material for the current zone.
MASSP(ML)	Material mass for the previous burnup time step for the current zone.
MATN(ML)	Material number for burnable isotopes.
NO(IM,JM)	Flux by radial and rotational position for current group and axial position and previous outer iteration.
N2(IM,JM)	Same as NO(IM,JM) except for current outer iteration.
N2B(IM,JM)	Same as N2(IM,JM) except for plane below current axial position.
N2T(IM,JM)	Same as N2(IM,JM) except for plane above current axial position.
NBR(ML)	Indicates fertile or fissile isotope for breeding ratio calculation.
PA(IM or JM)	Temporary storage for line inversion.
PHIB(IZM)	Average total flux by zone.
RO(IP)	Initial radii (or X mesh).
R1(IP)	Current radii. Also used for temporary storage of radial flux distribution in SINUS.
R2(IM)	Radial zone numbers.
R3(IZ)	Radial zone modifiers.
R4(IM)	Average radii.
R5(IM)	Length of each radial mesh interval.
RF(IM)	Temporary storage for radial flux distribution in S862. Stored at location LRO in array A.
S2(IM,JM)	Total source by radial and rotational position for current group and axial position.
TAO(JP)	Initial thetas (or Y mesh).
TA1(JP)	Current thetas. Also used for temporary storage of rotational flux distribution in SINUS.
TA2(JM)	Rotational zone numbers.
TA3(JZ)	Rotational zone modifiers.
TA4(JM)	Average thetas.
TA5(JM)	Length of each rotational mesh interval.
TF(JM)	Temporary storage of rotational flux distribution in S862. Stored in location LTAO in array A.
VO(IM,JM)	Volume elements by radial and rotational position for current axial position.
V7(IGM)	Neutron velocities by group.
VOL(IZM)	Volume by zone.
ZO(KP)	Initial axial (Z) mesh.
Z1(KP)	Current axial mesh. Also used for temporary storage of axial flux distribution in SINUS.
Z2(KM)	Axial zone numbers.
Z3(KZ)	Axial zone modifiers.
Z4(KM)	Average axii.

TABLE D-I (continued)

Variable (Dimension)	Description
Z5(KM)	Length of each axial mesh interval.
ZF(KM)	Temporary storage for axial flux distribution in S862. Stored at location LZ0 in array A.

TABLE D-II

DESCRIPTION OF NONSUBSCRIPTED COMMON VARIABLES

Variable	Description
A01	Cross-section format indicator.
A02	Theory (regular or adjoint) indicator.
ALA	Lambda for current outer iteration.
B01	Left boundary condition.
B0]	Right boundary condition.
B03	Front boundary condition.
B04	Back boundary condition.
B05	Bottom boundary condition.
B06	Top boundary condition.
B07	Flag used for internal computation in FISCAL and INIT.
CNT	Parabolic interpolation trigger in CNNP.
CVT	Lambda convergence trigger.
DAY	Accumulated burnup time in days.
DELT	Burnup interval in days.
D05	Outer iteration maximum.
E01	Used for temporary storage in INIT, OUTER, INNER, INNER2, INNERP, and FISCAL. E01 = 1 - λ in CNNP.
E02	Used for temporary storage in OUTER. E02 = $\|1 - \lambda\|$ in CNNP.
E03	Absolute value of the difference between lambda for the current outer iteration and that for the previous iteration.
EPS	Lambda (total fission source) convergence criterion.
EPSA	Eigenvalue search convergence criterion.
EQ	Eigenvalue slope in search options.
ESFL	Extended core storage field length.
EV	Eigenvalue for current outer iteration.
EVM	Eigenvalue modifier.
EVP	Previous eigenvalue in search options.
EVPP	Two eigenvalues back in search options.
EVPT	Eigenvalue for previous outer iteration.
FEF	Useful energy released per fission (205.0 MeV).
G06	Inner iteration pointwise flux convergence criterion.

TABLE D-II (continued)

Variable	
G07	Inner iteration maximum per group.
IDMTPS	Flag for producing flux dump on magnetic tape.
IGE	Geometry indicator.
IGEP	= IGE + 1.
IGM	Number of energy groups.
IGP	= IGM + 1.
IGV	Group indicator in OUTER, INNER, INNER2, and INNERP.
IHS	Position of sigma self-scatter in cross-section table.
IHT	Position of sigma transport in cross-section table.
IHTM1	= IHT - 1.
II	Inner iteration count for a single group.
IM	Number of radial (or X) mesh intervals.
IMJM	= IMxJM.
IMKM	= IMxKM.
I04	Eigenvalue type indicator.
IP	= IM + 1.
IPCUR	Flag for punching atom densities after each burnup interval.
IPFLX	Flag for punching flux dump.
ITEMP	Temporary storage.
ITEMP0	Temporary storage.
ITEMP1	Temporary storage.
ITEMP2	Temporary storage.
ITIMOF	Time limit (sec) for problem.
ITL	Cross-section table length.
IZ	Number of radial zone modifiers.
IZM	Number of material zones.
IZP	= IZM + 1.
JM	Number of rotational (Y) mesh intervals.
JMKM	= JMxKM.
JP	= JM + 1.
JZ	Number of rotational zone modifiers.
K07	Temporary storage for G07.
KM	Number of axial (Z) mesh intervals.

TABLE D-II (continued)

Variable	Description
KP	= KM + 1.
KPAGE	Page counter for monitor print.
KZ	Number of axial zone modifiers.
LAH	Upper limit on $\|1 - \lambda\|$ for parabolic interpolation.
LAL	Lower limit on $\|1 - \lambda\|$ for parabolic interpolation.
LAP	Converged lambda for previous eigenvalue.
LAPP	Converged lambda for two eigenvalues back.
LAR	Lambda for previous outer iteration.
LC	Total number of inner iterations for a single outer iteration.
LCP	Total number of R-θ (or X-Y) iterations for a single outer iteration.
LFLG	Error flag used in ECS read and write statements.
M01	Mixture specifications table length.
M05	Inner iteration reduction factor for R-θ iterations.
M06	Number of R-θ (or X-Y) planes with unique zone numbers.
M07	Flux guess indicator.
MCR	Number of material cross-section sets from cards.
ML	= MCR + MTP.
MT	Total number of materials including mixtures.
MTP	Number of material cross sections from tape (=0 currently).
NCFC	Trigger for computation of flux constants.
NCON	Burnup control.
NCR1	Disk file (tape simulation) for storing cross sections by group, material, and position in table.
NCXS1	Disk file (tape simulation) for boundary and central volume constants for flux calculation. Constants are stored by group and mesh point.
NFLUX1	Disk file (tape simulation) for storing current fluxes. Fluxes are stored by group and mesh point.
NGOTO	Trigger to terminate outer iteration loop.
NINP	System input file.
NOUT	System output file.
NPRT	Print control.
NSCRAT	Disk file (tape simulation) used as a scratch file.
NXCM	= ITL - IHS.

TABLE D-II (continued)

Variable	Description
ORF	Overrelaxation factor.
ORFP	ORF for $\|1 - \lambda\| \leq$ 10EPS.
P02	Outer iteration count.
POD	Parameter oscillation damper.
S01	Neutron source rate or power level.
S02	Parametric eigenvalue type indicator.
S03	Parametric eigenvalue.
S04	Inner Iteration maximum per group for $\|1 - \lambda\| >$ 10EPS.
SK7	Sum over all groups of K7(IGM).
T7	= alpha/velocity.
T11	Total fission neutron source for previous outer iterations.
TEMP	Temporary storage.
TEMP1	Temporary storage.
TEMP2	Temporary storage.
TEMP3	Temporary storage.
TEMP4	Temporary storage.
TI	Current time (system clock).
T06	= 1/0 (δ calculation/no).
TSD	= 1.602×10^{-19} FEF (MW-sec/fission).
V11	Total source for the current group.

The remaining nonsubscripted common variables are pointers for locating, in the container block A, the variable-dimensioned arrays specified.

Variable	Pointer for Array	Variable	Pointer for Array
LA0	A0(JM,KM)	LA1	A1(IM,KM)
LA2	A2(IM,JM)	LALAM	ALAM(ML)
LATW	ATW(ML)	LAXSC	AXS(ML)
LBRDT	BRDT(IZM)	LC0	C0(ITL,MT)
LCXBC	CXB(IM,KM)	LCXC3P	CXS3P(IM,JM)
LCXRC	CXR(JM,KM)	LCXSC1	CXS1(IM,JM)
LCXSC2	CXS2(IM,JM)	LCXSC3	CXS3(IM,JM)
LCXSC4	CXS4(IM,JM)	LCXTC	CXT(IM,JM)
LE0	E0(IGP)	LE1	E1(IGP)
LE2	E2(IGP)	LE3	E3(IGP)
LE4	E4(IGP)	LE5	E5(IGP)
LE6	E6(IGP)	LE7	E7(IGP)
LE8	E8(IGP)	LE9	E9(IGP)
LE10	E10(IGP)	LE11	E11(IGP)
LF0	F0(IM,JM)	LF2	F2(IM,JM)
LFXSC	FXS(ML)	LHA	HA(IM or JM)
LHOLN	HOLN(ML)	LIDZNO	IDZNO(KM)
LI0	I0(M01)	LI1	I1(M01)
LI2	I2(M01)	LI3	I3(M01)
LK6	K6(IGM)	LK7	K7(IGM)
LLAXS	LAXS(IZM)	LLCN	LCN(ML,2)
LLCXS1	LCXS1(KM)	LLCXS2	LCXS2(KM)
LLCXS3	LCXS3(KM)	LLCXS4	LCXS4(KM)
LLCXB	LCXB(IGM)	LLCXR	LCXR(IGM)
LLCXT	LCXT(IGM)	LLD	LD(ML)
LLECS2	LECS2(KM)	LLFDN0	LFDEN0(KM)
LLFDN1	LFDEN1(KM)	LLFLX0	LFLX0(KM)

TABLE D-II (continued)

Variable	Pointer for Array	Variable	Pointer for Array	Variable	Pointer for Array	Variable	Pointer for Array
LLFLX1	LFLX1(KM)	LLFN	LFN(ML,7)	LR2	R2(IM)	LR3	R3(IZ)
LLFXS	LFXS(IZM)	LLVOL	LVOL(KM)	LR4	R4(IM)	LR5	R5(IM)
LLIDZ	LIDZ(M06)	LLMASS	LMASS(IZM)	LS2	S2(IM,JM)	LTA0	TA0(JP)
LLMASP	LMASSP(IZM)	LM0	M0(IM,JM)	LTA1	TA1(JP)	LTA2	TA2(JM)
LM1	M1(IM,JM)	LM2	M2(IZM)	LTA3	TA3(JZ)	LTA4	TA4(JM)
LMASSC	MASS(ML)	LMASPC	MASSP(ML)	LTA5	TA5(JM)	LV0	V0(IM,JM)
LMATN	MATN(ML)	LN2	N2(IM,JM)	LV7	V7(IGM)	LVOLC	VOL(IZM)
LN2B	N2B(IM,JM)	LN2T	N2T(IM,JM)	LZ0	Z0(KP)	LZ1	Z1(KP)
LNBR	NBR(ML)	LN0	N0(IM,JM)	LZ2	Z2(KM)	LZ3	Z3(KZ)
LPA	PA(IM or JM)	LPHIB	PHIB(IZM)	LZ4	Z4(KM)	LZ5	Z5(KM)
LR0	R0(IP)	LR1	R1(IP)				

APPENDIX E

EXECUTED SAMPLE PROBLEM

Input data and selected computer output for a simple three-group, three-zone, one-step burnup problem in X-Y-Z geometry are given in the following pages. The reactor consists of a cubical core region 80 cm on a side, surrounded on all sides by a blanket region 30 cm thick. Thus, the reactor is a cube 140 cm on a side. The core region is divided into two material zones: an inner cube 40 cm on a side and an outer cubical shell 20 cm thick. Initial compositions of the core and blanket zones are given in Table E-I.

Because of symmetry, only one octant of the reactor is represented in the calculational model. A reflective boundary condition is applied to the interior boundaries of the octant and a vacuum boundary condition is applied to the exterior boundaries. The spatial mesh contains 14 intervals in each dimension and the initial flux profiles are computed internally from cosine distributions and an input energy distribution.

TABLE E-I

INITIAL COMPOSITIONS OF CORE AND BLANKET ZONES

	Atom Density in Units of 10^{24}		
Material	Core (Zone 1)	Core (Zone 2)	Blanket (Zone 3)
^{238}U	0.008	0.010	0.030
^{239}Pu	0.0016	0.002	≈0
^{240}Pu	0.0001	0.00012	- - -
C	0.020	0.020	- - -
Na	0.006	0.006	- - -
Fe	0.013	0.013	0.0062
Fission Products	≈0	≈0	≈0

In the sample problem, the initial k_{eff} calculation is followed by a burnup interval of 30 days with the reactor at 1000 MWT total power. Following the burnup interval, a final k_{eff} is computed for the new material compositions resulting from fuel depletion, breeding, and fission-product buildup.

I N P U T D A T A

```
 3DDT SAMPLE PROBLEM,3-GROUP,3-ZONE,X-Y-Z,14X14X14 MESH,30 DAY BURNUP      CARD 1
           2           0           0           3           1           5  CARD 2
          14          14          14 0.0    E+00 0.0    E+00 1.0    E-04  CARD 3
           1           0           1           0           1           0  CARD 4
          13          21          10           0           0           0  CARD 5
           0 0.0    E+00           3           6           7           9  CARD 6
-1.25   E+02           2           3           5          30          10  CARD 7
 0.0    E+00 1.0    E-03 5.0    E-03 5.0    E-01 1.0    E+00 1.0    E-03  CARD 8
           1           0           1         270 1.4    E+00          75  CARD 9
 U238C238.05  0.0  U-238 3-GROUP CROSS SECTIONS FOR CORE
2.76600166-11.83582941-14.74030771062.76596583-14.76023543-15.0169050552      1
4.11970414220.          0.          1.59990100-10.          8.0399900000      2
1.59999000-10.          8.19999000008.00000000005.42741058-10.                3
6.82093260-10.          1.20796811+16.81993172-10.          1.27616743+1      4
1.20795810+13.99999000-27.78596878-2                                          5
PU239C239.05  0.0 PU-239 3-GROUP CROSS SECTIONS FOR CORE
1.88391315891.80354870023.21999082911.88390717535.48035758845.1038980044      1
2.86092519050.          0.          1.83999000001.67014000006.5599900000      2
1.84000000004.80999000008.39999000006.51000000003.08136742-10.                3
3.03318283152.30463146901.06101953+13.03327833586.59123782061.36434736+1      4
1.06102908+15.00000000-25.09229120-2                                          5
PU240C240.05  0.0 PU-240 3-GROUP CROSS SECTIONS FOR CORE
1.26693901151.15083296693.68961589611.26693349403.88098953884.9565493901      1
3.24001106910.          0.          2.80000000-14.99997000-27.9199900000      2
2.80000000-11.58999000-18.19999000007.86999000003.90563684-10.                3
6.83166019-12.27792271-91.09999115+16.83158660-16.83375196-91.16830702+1      4
1.09999042+15.00000000-25.90356248-2                                          5
CARBON 12.01  0.0 CARBON 3-GROUP CROSS SECTIONS FOR CORE
2.01936907-60.          2.27920041990.          0.          2.2792004199      1
1.99159767030.          0.          2.8421709-140.          3.5899900000      2
0.          0.          3.58999000003.15699000002.87600730-10.                3
5.29670305-60.          4.30379842053.0626253-160.          4.3037984205      4
4.30379312384.33000000-10.                                                    5
    NA 22.99  0.0     NA 3-GROUP CROSS SECTIONS FOR CORE
3.16633341-30.          2.74087478003.16868794-30.          2.7440434593      1
2.43232536680.          0.          9.00990000-40.          3.1062900000      2
9.00030000-40.          3.10719000002.91129000002.87600730-10.                3
1.02053027-30.          4.47045662631.02340251-30.          4.4714800248      4
4.47045949451.94999010-12.09510288-2                                          5
  FE C 55.85  0.0     FE 3-GROUP CROSS SECTIONS FOR CORE
8.52005273-30.          2.19356929198.51727572-30.          2.2020865662      1
2.06394948240.          0.          1.00101000-20.          2.4300000000      2
1.00000000-20.          2.44000000002.35899000001.25842594-10.                3
1.01654366-20.          3.45027040031.01677373-20.          3.4604381377      4
3.45027270107.09999000-23.77443653-3                                          5
```

```
 U238B238.05  0.0  U-238 3-GROUP CROSS SECTIONS FOR BLANKET
2.10214983-19.65279995-25.00627110142.10212570-12.49176842-15.2164845447        1
4.39923251220.           0.           1.59990100-10.           8.0399900000        2
1.59999000-10.           8.19999000008.00000000005.28680781-10.                    3
5.25432310-10.           1.18704180+15.25332211-10.           1.23957502+1        4
1.18703179+13.99999000-27.83562669-?                                              5
PU239B239.05  0.0 PU-239 3-GROUP CROSS SECTIONS FOR BLANKET
1.85392199141.76157876913.48437062771.85391822855.26578360205.3382888562        1
3.13310604190.           0.           1.83999000001.67014000006.5599900000        2
1.84000000004.80999000008.39999000006.51000000003.00112930-10.                   3
2.59306957562.06590039671.07317383+12.59316746095.90846685841.33249058+1        4
1.07318362+15.00000000-25.11478920-2                                              5
  FE B 55.85  0.0      FE 3-GROUP CROSS SECTIONS FOR BLANKET
9.23190161-30.           2.21460906559.23030490-30.           2.2238393696        1
2.07976530500.           0.           1.00101000-20.           2.4300000000        2
1.00000000-20.           2.44000000002.35899000001.31642478-10.                   3
1.00239771-20.           2.88873591501.00254823-20.           2.8987613974        4
2.88873742027.09999000-23.19968474-3                                              5
FIS PR 1.0    0.0 FISSION PRODUCTS 3-GROUP CROSS SECTIONS
 6.7     -02 0.0     +00 0.0     +00 6.7     -02 0.0     +00 6.7     -02
 0.0     +00 0.0     +00 0.0     +00 1.5     -01 0.0     +00 0.0     +00
 1.5     -01 0.0     +00 1.5     -01 0.0     +00 0.0     +00 0.0     +00
 3.3     -01 0.0     +00 0.0     +00 3.3     -01 0.0     +00 3.3     -01
 0.0     +00 0.0     +00 0.0     +00
203 0.0     203 20.0    205 40.0        70.0    3                          R0
203 0.0     203 20.0    205 40.0        70.0    3                          TA0
203 0.0     203 20.0    205 40.0        70.0    3                          Z0
   1.0         1.0         1.0      3                                      EF
104         1104        2106        3104        1104        2106        3 M0 PL 1
104         1104        2106        3104        1104        2106        3 M0 PL 1
108         2106        3108        2106        3108        2106        3 M0 PL 1
108         2106        34          33                                     M0 PL 1
108         2106        3108        2106        3108        2106        3 M0 PL 2
108         2106        3108        2106        3108        2106        3 M0 PL 2
108         2106        3108        2106        34          33          M0 PL 2
4           33                                                             M0 PL 3
104         1104        2106        33                                     IDZNO
          11          12          133                                      M2
   0.896       0.090       0.014    3                                      K7
   1.2568+09   6.7000+08   2.0432+083                                      V7
108       11108       12105       133                                      I0
            0           1           2           3           4           5 I1
            6           10          0           1           2           3 I1
            4           5           6          10           0           7 I1
            8           9           103                                    I1
   0.0   +00   8.0   -03   1.6   -03   1.0   -04   2.0   -02   6.0   -03 I2
   1.3   -02   1.0   -20   0.0   +00   1.0   -02   2.0   -03   1.2   -04 I2
   2.0   -02   6.0   -03   1.3   -02   1.0   -20   0.0   +00   3.0   -02 I2
   1.0   -20   6.2   -03   1.0   -203                                     I2
```

```
 6     0 30.0                                                                  BURNUP 1
 1     1     0     0     0     0     0     0     0     0     0     0BURNUP 2
 2     2     0     1     0     0     0     0     0     0     0     0BURNUP 2
 3     1     0     2     0     0     0     0     0     0     0     0BURNUP 2
 7     1     0     0     0     0     0     0     0     0     0     0BURNUP 2
 8     2     0     4     0     0     0     0     0     0     0     0BURNUP 2
10     0     0     0     0     1     2     3     4     5     0     0BURNUP 2
 0                                                                          BURNUP 1
```

O U T P U T D A T A

3DDT SAMPLE PROBLEM,3-GROUP,3-ZONE,X-Y-Z,14X14X14 MESH,30 DAY BURNUP

```
A01  CROSS SECTION FORMAT INDICATOR (1/2 = BNWL/LASL)                                  2
A02  THEORY  (0/1=REGULAR/ADJOINT)                                                     0
IGE  GEOMETRY (0/1=X-Y-Z/R-THETA-Z)                                                    0
IZM  NUMBER OF MATERIAL ZONES                                                          3
IC4  EIGENVALUE TYPE (1/2/3/4=K/ALPHA/C/DELTA)                                         1
MC7  FLUX GUESS (0/1,2,3/4/5 = NONE/CARDS/TAPE/SINUSOID)                               5

IM   NUMBER OF RADIAL (X) INTERVALS                                                   14
JM   NUMBER OF ROTATIONAL (Y) INTERVALS                                               14
KM   NUMBER OF AXIAL (Z) INTERVALS                                                    14
EV   FIRST EIGENVALUE GUESS                                                  0.
EVM  EIGENVALUE MODIFIER                                                     0.
EPS  LAMBDA CONVERGENCE CRITERION                                            1.0000E-04

B01  LEFT BOUNDARY CONDITION (0/1=VACUUM/REFLECTIVE)                                   1
B02  RIGHT BOUNDARY CONDITION (0/1=VACUUM/REFLECTIVE)                                  0
B03  FRONT BOUNDARY CONDITION (0/1/2 = VAC/REFL/PERIODIC)                              1
B04  BACK BOUNDARY CONDITION (0/1/2 = VAC/REFL/PERIODIC)                               0
B05  BOTTOM BOUNDARY CONDITION (0/1 = VACUUM/REFLECTIVE)                               1
B06  TOP BOUNDARY CONDITION (0/1 = VACUUM/REFLECTIVE)                                  0

MT   TOTAL NUMBER OF MATERIALS INCLUDING MIXES                                        13
M01  NUMBER OF MIXTURE SPECIFICATIONS                                                 21
MCR  NUMBER OF MATERIALS FROM CARDS                                                   10
IZ   RADIAL ZONES (DELTA OPTION ONLY)                                                  0
JZ   ROTATIONAL ZONES (DELTA OPTION ONLY)                                              0
KZ   AXIAL ZONES (DELTA OPTION ONLY)                                                   0

S02  PARAMETRIC EIGENVALUE TYPE (0/1/2=NONE/K/ALPHA)                                   0
S03  PARAMETRIC EIGENVALUE                                                   0.
IGM  NUMBER OF GROUPS                                                                  3
IHT  POSITION OF SIGMA TRANSPORT                                                       6
IHS  POSITION OF SIGMA SELF SCATTER                                                    7
ITL  CROSS SECTION TABLE LENGTH                                                        9
```

S01	NEUTRON SOURCE RATE (POSITIVE) OR POWER IN MWT(NEGATIVE)	-1.2500E+02
M05	INNER ITERATION REDUCTION FACTOR FOR R-THETA (X-Y) PLANE	2
M06	NUMBER OF R-THETA(X-Y) PLANES HAVING UNIQUE ZONE NOS.	3
S04	INNER ITER MAX PER GROUP FOR 1-LAMBDA .GT. 10*EPS	5
O05	OUTER ITERATION MAXIMUM	30
G07	INNER ITERATION MAXIMUM PER GROUP	10
G05	NOT USED	0.
G06	INNER ITERATION FLUX CONVERGENCE CRITERION	1.0000E-03
LAL	LAMBDA LOWER LIMIT	5.0000E-03
LAH	LAMBDA UPPER LIMIT	5.0000E-01
POD	PARAMETER OSCILLATION DAMPER	1.0000E+00
EPSA	EIGENVALUE SEARCH CONVERGENCE CRITERION	1.0000E-03
IPFLX	PUNCH FLUX DUMP (0/1=YES/NO)	1
IPCUR	PUNCH DENSITIES (0/1=NO/YES)	0
IDMTPS	PREPARE SPECIAL FLUX DUMP TAPE (0/1=YES/NO)	1
ITIMOF	TIME LIMIT IN SECONDS	270
ORF	OVER RELAXATION FACTOR	1.4000E+00
ESFL	ECS FIELD LENGTH IN THOUSANDS (OCTAL)	75

THE FOLLOWING NUCLIDES ARE FROM CARDS

1	U238C	U-238 3-GROUP CROSS SECTIONS FOR CORE
2	PU239C	PU-239 3-GROUP CROSS SECTIONS FOR CORE
3	PU240C	PU-240 3-GROUP CROSS SECTIONS FOR CORE
4	CARBON	CARBON 3-GROUP CROSS SECTIONS FOR CORE
5	NA	NA 3-GROUP CROSS SECTIONS FOR CORE
6	FE C	FE 3-GROUP CROSS SECTIONS FOR CORE
7	U238B	U-238 3-GROUP CROSS SECTIONS FOR BLANKET
8	PU239B	PU-239 3-GROUP CROSS SECTIONS FOR BLANKET
9	FE B	FE 3-GROUP CROSS SECTIONS FOR BLANKET
10	FIS PR	FISSION PRODUCTS 3-GROUP CROSS SECTIONS

MESH BOUNDARIES (RO/TAO/ZO=RADIAL/ROTATIONAL/AXIAL)

RO 15

0.	5.0000E+00	1.0000E+01	1.5000E+01	2.0000E+01	2.5000E+01	3.0000E+01	3.5000E+01	4.0000E+01	4.5000E+01
5.0000E+01	5.5000E+01	6.0000E+01	6.5000E+01	7.0000E+01					

TAO 15

0.	5.0000E+00	1.0000E+01	1.5000E+01	2.0000E+01	2.5000E+01	3.0000E+01	3.5000E+01	4.0000E+01	4.5000E+01
5.0000E+01	5.5000E+01	6.0000E+01	6.5000E+01	7.0000E+01					

ZO 15

0.	5.0000E+00	1.0000E+01	1.5000E+01	2.0000E+01	2.5000E+01	3.0000E+01	3.5000E+01	4.0000E+01	4.5000E+01
5.0000E+01	5.5000E+01	6.0000E+01	6.5000E+01	7.0000E+01					

```
FLUX GUESS  RF/TF/ZF=RADIAL/ROTATIONAL/AXIAL FROM SINUS, EF=ENERGY FROM CARDS
     RF    14
.99863E+00  .98769E+00  .96593E+00  .93358E+00  .89101E+00  .83867E+00  .77715E+00  .70711E+00  .62932E+00  .54464E+00
.45399E+00  .35837E+00  .25882E+00  .15644E+00
     TF    14
.99863E+00  .98769E+00  .96593E+00  .93358E+00  .89101E+00  .83867E+00  .77715E+00  .70711E+00  .62932E+00  .54464E+00
.45399E+00  .35837E+00  .25882E+00  .15644E+00
     ZF    14
.99863E+00  .98769E+00  .96593E+00  .93358E+00  .89101E+00  .83867E+00  .77715E+00  .70711E+00  .62932E+00  .54464E+00
.45399E+00  .35837E+00  .25882E+00  .15644E+00

   EF     3
1.0000E+00  1.0000E+00  1.0000E+00


ZONE NUMBERS FOR UNIQUE R-THETA (X-Y) PLANES

PLANE =     1

    MO   196
         1         1         1         1         2         2         2         2         3         3
         3         3         3         3         1         1         1         1         2         2
         2         2         3         3         3         3         3         3         1         1
         1         1         2         2         2         2         3         3         3         3
         3         3         1         1         1         1         2         2         2         2
         3         3         3         3         3         3         2         2         2         2
         2         2         2         2         3         3         3         3         3         3
         2         2         2         2         2         2         2         2         3         3
         3         3         3         3         2         2         2         2         2         2
         2         2         3         3         3         3         3         3         2         2
         2         2         2         2         2         2         3         3         3         3
         3         3         3         3         3         3         3         3         3         3
         3         3         3         3         3         3         3         3         3         3
         3         3         3         3         3         3         3         3         3         3
         3         3         3         3         3         3         3         3         3         3
         3         3         3         3         3         3         3         3         3         3
         3         3         3         3         3         3         3         3         3         3
         3         3         3         3         3         3         3         3         3         3
         3         3         3         3         3         3
```

PLANE = 2

MO 196

2 2 2 2 2 2 2 2 3 3
3 3 3 3 2 2 2 2 2 2
2 2 3 3 3 3 3 3 2 2
2 2 2 2 2 2 3 3 3 3
3 3 2 2 2 2 2 2 2 2
3 3 3 3 3 3 2 2 2 2
2 2 2 2 3 3 3 3 3 3
2 2 2 2 2 2 2 2 3 3
3 3 3 3 2 2 2 2 2 2
2 2 3 3 3 3 3 3 2 2
2 2 2 2 2 2 3 3 3 3
3 3 3 3 3 3 3 3 3 3
3 3 3 3 3 3 3 3 3 3
3 3 3 3 3 3 3 3 3 3
3 3 3 3 3 3 3 3 3 3
3 3 3 3 3 3 3 3 3 3
3 3 3 3 3 3 3 3 3 3
3 3 3 3 3 3 3 3 3 3
3 3 3 3 3 3

PLANE = 3

MO 196

3 3 3 3 3 3 3 3 3 3
3 3 3 3 3 3 3 3 3 3
3 3 3 3 3 3 3 3 3 3
3 3 3 3 3 3 3 3 3 3
3 3 3 3 3 3 3 3 3 3
3 3 3 3 3 3 3 3 3 3
3 3 3 3 3 3 3 3 3 3
3 3 3 3 3 3 3 3 3 3
3 3 3 3 3 3 3 3 3 3
3 3 3 3 3 3 3 3 3 3
3 3 3 3 3 3 3 3 3 3
3 3 3 3 3 3 3 3 3 3
3 3 3 3 3 3 3 3 3 3
3 3 3 3 3 3 3 3 3 3
3 3 3 3 3 3 3 3 3 3
3 3 3 3 3 3 3 3 3 3
3 3 3 3 3 3 3 3 3 3
3 3 3 3 3 3 3 3 3 3
3 3 3 3 3 3

```
 IDZNO    14
          1          1          1          1          2          2          2          2          3          3
          3          3          3          3

MATERIAL NUMBERS BY ZONE

    M2     3
          11         12         13


FISSION SPECTRUM

    K7     3
 8.9600E-01  9.0000E-02  1.4000E-02

NEUTRON VELOCITY

    V7     3
 1.2568E+09  6.7000E+08  2.0432E+08

MIXTURE SPECIFICATIONS (IO/I1/I2=MIX NUMBER/MAT. NUMBER FOR MIX/MATERIAL DENSITY)

    IO    21
          11         11         11         11         11         11         11         11         12         12
          12         12         12         12         12         12         13         13         13         13
          13

    I1    21
           0          1          2          3          4          5          6         10          0          1
           2          3          4          5          6         10          0          7          8          9
          10

    I2    21
 0.         8.0000E-03 1.6000E-03 1.0000E-04 2.0000E-02 6.0000E-03 1.3000E-02 1.0000E-20 0.         1.0000E-02
 2.0000E-03 1.2000E-04 2.0000E-02 6.0000E-03 1.3000E-02 1.0000E-20 0.         3.0000E-02 1.0000E-20 6.2000E-03
 1.0000E-20
```

ZONE MAP RADIAL

```
      3 3 3 3 3 3 3 3 3 3 3 3 3 3
      3 3 3 3 3 3 3 3 3 3 3 3 3 3
R     3 3 3 3 3 3 3 3 3 3 3 3 3 3
O     3 3 3 3 3 3 3 3 3 3 3 3 3 3
T     3 3 3 3 3 3 3 3 3 3 3 3 3 3
A     3 3 3 3 3 3 3 3 3 3 3 3 3 3
T     2 2 2 2 2 2 2 2 3 3 3 3 3 3
I     2 2 2 2 2 2 2 2 2 3 3 3 3 3
O     2 2 2 2 2 2 2 2 2 3 3 3 3 3
N     2 2 2 2 2 2 2 2 2 3 3 3 3 3
A     1 1 1 1 2 2 2 2 3 3 3 3 3 3
L     1 1 1 1 2 2 2 2 3 3 3 3 3 3
      1 1 1 1 2 2 2 2 3 3 3 3 3 3
      1 1 1 1 2 2 2 2 3 3 3 3 3 3
```

THE ZONE MAP ABOVE AND THE MATERIAL MAP BELOW
APPLY TO THE FOLLOWING AXIAL POSITIONS K

K = 1
K = 2
K = 3
K = 4

MATERIAL MAP

```
     13131313131313131313131313
     13131313131313131313131313
     13131313131313131313131313
     13131313131313131313131313
     13131313131313131313131313
     13131313131313131313131313
     12121212121212121213131313
     12121212121212121213131313
     12121212121212121213131313
     12121212121212121213131313
     11111111112121212131313131
     11111111112121212131313131
     11111111112121212131313131
     11111111112121212131313131
```

ZONE MAP

```
      3 3 3 3 3 3 3 3 3 3 3 3 3 3
      3 3 3 3 3 3 3 3 3 3 3 3 3 3
      3 3 3 3 3 3 3 3 3 3 3 3 3 3
      3 3 3 3 3 3 3 3 3 3 3 3 3 3
      3 3 3 3 3 3 3 3 3 3 3 3 3 3
      3 3 3 3 3 3 3 3 3 3 3 3 3 3
      2 2 2 2 2 2 2 2 3 3 3 3 3 3
      2 2 2 2 2 2 2 2 2 3 3 3 3 3
      2 2 2 2 2 2 2 2 2 3 3 3 3 3
      2 2 2 2 2 2 2 2 2 3 3 3 3 3
      2 2 2 2 2 2 2 2 2 3 3 3 3 3
      2 2 2 2 2 2 2 2 2 3 3 3 3 3
      2 2 2 2 2 2 2 2 2 3 3 3 3 3
```

THE ZONE MAP ABOVE AND THE MATERIAL MAP BELOW
APPLY TO THE FOLLOWING AXIAL POSITIONS K

K = 5
K = 6
K = 7
K = 8

MATERIAL MAP

```
     13131313131313131313131313
     13131313131313131313131313
     13131313131313131313131313
     13131313131313131313131313
     13131313131313131313131313
     13131313131313131313131313
     12121212121212121213131313
     12121212121212121213131313
     12121212121212121213131313
     12121212121212121213131313
     12121212121212121213131313
     12121212121212121213131313
     12121212121212121213131313
```

ZONE MAP

```
      3 3 3 3 3 3 3 3 3 3 3 3 3 3
      3 3 3 3 3 3 3 3 3 3 3 3 3 3
      3 3 3 3 3 3 3 3 3 3 3 3 3 3
      3 3 3 3 3 3 3 3 3 3 3 3 3 3
      3 3 3 3 3 3 3 3 3 3 3 3 3 3
      3 3 3 3 3 3 3 3 3 3 3 3 3 3
      3 3 3 3 3 3 3 3 3 3 3 3 3 3
      3 3 3 3 3 3 3 3 3 3 3 3 3 3
      3 3 3 3 3 3 3 3 3 3 3 3 3 3
      3 3 3 3 3 3 3 3 3 3 3 3 3 3
      3 3 3 3 3 3 3 3 3 3 3 3 3 3
      3 3 3 3 3 3 3 3 3 3 3 3 3 3
      3 3 3 3 3 3 3 3 3 3 3 3 3 3
      3 3 3 3 3 3 3 3 3 3 3 3 3 3
```

THE ZONE MAP ABOVE AND THE MATERIAL MAP BELOW
APPLY TO THE FOLLOWING AXIAL POSITIONS K

K = 9
K = 10
K = 11
K = 12
K = 13
K = 14

MATERIAL MAP

```
13131313131313131313131313
13131313131313131313131313
13131313131313131313131313
13131313131313131313131313
13131313131313131313131313
13131313131313131313131313
13131313131313131313131313
13131313131313131313131313
13131313131313131313131313
13131313131313131313131313
13131313131313131313131313
13131313131313131313131313
13131313131313131313131313
13131313131313131313131313
```

T I M E = 0.000 D A Y S

	MIXTURE NUMBER	MIX COMMAND	MATERIAL ATOMIC DENSITY
1	11	C	0.
2	11	1	.80000000E-02
3	11	2	.16000000E-02
4	11	3	.10000000E-03
5	11	4	.20000000E-01
6	11	5	.60000000E-02
7	11	6	.13000000E-01
8	11	10	.10000000E-19
9	12	C	0.
10	12	1	.10000000E-01
11	12	2	.20000000E-02
12	12	3	.12000000E-03
13	12	4	.20000000E-01
14	12	5	.60000000E-02
15	12	6	.13000000E-01
16	12	10	.10000000E-19
17	13	C	0.
18	13	7	.30000000E-01
19	13	8	.10000000E-19
20	13	9	.62000000E-02
21	13	10	.10000000E-19

CROSS-SECTION EDIT

GROUP 1 CROSS-SECTIONS

MAT 1	1.83583E-01	2.76597E-01	4.76024E-01	5.01691E+00	4.11970E+00	C.	0.
MAT 2	1.80355E+00	1.88391E+00	5.48036E+00	5.10390E+00	2.86093E+00	0.	0.
MAT 3	1.15083E+00	1.26693E+00	3.88099E+00	4.95655E+00	3.24001E+00	C.	0.
MAT 4	0.	0.	0.	2.27920E+00	1.99160E+00	C.	0.
MAT 5	0.	3.16869E-03	0.	2.74404E+00	2.43233E+00	C.	0.
MAT 6	0.	8.51728E-03	0.	2.20209E+00	2.06395E+00	C.	0.
MAT 7	9.65280E-02	2.10213E-01	2.49177E-01	5.21648E+00	4.39923E+00	C.	0.
MAT 8	1.76158E+00	1.85392E+00	5.26578E+00	5.33829E+00	3.13311E+00	C.	0.
MAT 9	0.	9.23030E-03	0.	2.22384E+00	2.07977E+00	C.	0.
MAT 10	0.	6.70000E-02	0.	6.70000E-02	0.	C.	0.
MAT 11	4.46942E-03	5.48345E-03	1.29649E-02	1.39473E-01	1.19116E-01	C.	0.
MAT 12	5.58103E-03	6.81555E-03	1.61867E-02	1.51647E-01	1.28565E-01	C.	0.
MAT 13	2.89584E-03	6.36360E-03	7.47531E-03	1.70282E-01	1.44872E-01	0.	0.

GROUP 2 CROSS-SECTIONS

MAT 1	0.	1.59999E-01	0.	8.19999E+00	8.00000E+00	5.42741E-01	0.
MAT 2	1.67014E+00	1.84000E+00	4.80999E+00	8.39999E+00	6.51000E+00	3.08137E-01	0.
MAT 3	4.99997E-02	2.80000E-01	1.58999E-01	8.19999E+00	7.86999E+00	3.90564E-01	0.
MAT 4	0.	0.	0.	3.58999E+00	3.15699E+00	2.87601E-01	0.
MAT 5	0.	9.00030E-04	0.	3.10719E+00	2.91129E+00	2.87601E-01	0.
MAT 6	0.	1.00000E-02	0.	2.44000E+00	2.35899E+00	1.25843E-01	0.
MAT 7	0.	1.59999E-01	0.	8.19999E+00	8.00000E+00	5.28681E-01	0.
MAT 8	1.67014E+00	1.84000E+00	4.80999E+00	8.39999E+00	6.51000E+00	3.00113E-01	0.
MAT 9	0.	1.00000E-02	0.	2.44000E+00	2.35899E+00	1.31642E-01	0.
MAT 10	0.	1.50000E-01	0.	1.50000E-01	0.	C.	0.
MAT 11	2.67722E-03	4.38739E-03	7.71188E-03	2.02023E-01	1.86477E-01	1.39876E-02	0.
MAT 12	3.34628E-03	5.44899E-03	9.63906E-03	2.21947E-01	2.05239E-01	1.52041E-02	0.
MAT 13	1.67014E-20	4.86197E-03	4.80999E-20	2.61128E-01	2.54626E-01	1.66766E-02	0.

GROUP 3 CROSS-SECTIONS

MAT 1	0.	6.81993E-01	0.	1.27617E+01	1.20796E+01	3.99999E-02	7.78597E-02
MAT 2	2.30463E+00	3.03328E+00	6.59124E+00	1.36435E+01	1.06103E+01	5.00000E-02	5.09229E-02
MAT 3	2.27792E-09	6.83159E-01	6.83375E-09	1.16831E+01	1.09999E+01	5.00000E-02	5.90356E-02
MAT 4	0.	3.06263E-16	0.	4.30380E+00	4.30379E+00	4.33000E-01	0.
MAT 5	0.	1.02340E-03	0.	4.47148E+00	4.47046E+00	1.94999E-01	2.09510E-02
MAT 6	0.	1.01677E-02	0.	3.46044E+00	3.45027E+00	7.09999E-02	3.77444E-03
MAT 7	0.	5.25332E-01	0.	1.23958E+01	1.18703E+01	3.99999E-02	7.83563E-02
MAT 8	2.06590E+00	2.59317E+00	5.90847E+00	1.33249E+01	1.07318E+01	5.00000E-02	5.11479E-02
MAT 9	0.	1.00255E-02	0.	2.89876E+00	2.88874E+00	7.09999E-02	3.19968E-03
MAT 10	0.	3.30000E-01	0.	3.30000E-01	0.	C.	0.
MAT 11	3.68741E-03	1.05158E-02	1.05460E-02	2.82982E-01	2.72465E-01	1.11580E-02	8.85032E-04
MAT 12	4.60926E-03	1.31068E-02	1.31825E-02	3.14196E-01	3.01089E-01	1.12590E-02	1.06230E-03
MAT 13	2.06590E-20	1.58221E-02	5.90847E-20	3.89845E-01	3.74020E-01	1.64020E-03	2.37053E-03

TIME (MINUTES)	OUTER ITERATIONS	IN. IT. 3D LOOP	IN. IT. 2D LOOP	EIGENVALUE SLOPE	EIGENVALUE	LAMBDA
.10	0	0	0	0.	0.	0.
.31	1	15	420	0.	.83482885E+00	.83482885E+00
.47	2	15	420	0.	.97368630E+00	.11663304E+01
.64	3	15	420	0.	.10188209E+01	.10463543E+01
.80	4	15	420	0.	.10340800E+01	.10149773E+01
.96	5	15	420	0.	.10404645E+01	.10061740E+01
1.12	6	15	420	0.	.10433985E+01	.10028200E+01
1.29	7	15	420	0.	.10448276E+01	.10013696E+01
1.45	8	15	419	0.	.10455372E+01	.10006791E+01
1.50	9	3	91	0.	.10455627E+01	.10000244E+01
1.55	10	3	85	0.	.10456522E+01	.10000856E+01

FINAL NEUTRON BALANCE TABLE

GROUP	FISS SOURCE	IN-SCATTER	OUT-SCATTER	ABSORPTION	LEFT LEAK	RIGHT LEAK	FRONT LEAK	BACK LEAK
1	9.32941E+18	3.27680E+05	6.59828E+18	2.55785E+18	0.	5.79768E+16	0.	5.80457E+16
2	9.37106E+17	6.06002E+18	3.64069E+18	2.73898E+18	0.	2.05700E+17	0.	2.05924E+17
3	1.45772E+17	4.17945E+18	4.44266E+14	4.23067E+18	0.	3.13536E+16	0.	3.13822E+16
4	1.04123E+19	1.02395E+19	1.02394E+19	9.52749E+18	0.	2.95030E+17	0.	2.95352E+17

GROUP	BOTTOM LEAK	TOP LEAK	TOTAL LEAK
1	0.	5.80387E+16	1.74061E+17
2	0.	2.05909E+17	6.17534E+17
3	0.	3.13834E+16	9.41192E+16
4	0.	2.95332E+17	8.85714E+17

FLUX FOR GROUP 1

HORIZONTAL PLANE K= 1

	1	2	3	4	5	6	7	8	9
1	8.46611E+15	8.33843E+15	8.09129E+15	7.74263E+15	7.30375E+15	6.52439E+15	5.47077E+15	4.16639E+15	2.51690E+15
2	8.33904E+15	8.21122E+15	7.96363E+15	7.61418E+15	7.17509E+15	6.40379E+15	5.36632E+15	4.08515E+15	2.46694E+15
3	8.09307E+15	7.96479E+15	7.71553E+15	7.36233E+15	6.91880E+15	6.16222E+15	5.15696E+15	3.92245E+15	2.36695E+15
4	7.74585E+15	7.61678E+15	7.36377E+15	6.99954E+15	6.53436E+15	5.79737E+15	4.84124E+15	3.67774E+15	2.21676E+15
5	7.30844E+15	7.17917E+15	6.92173E+15	6.53584E+15	6.00804E+15	5.30185E+15	4.41600E+15	3.35003E+15	2.01628E+15
6	6.53015E+15	6.40899E+15	6.16632E+15	5.80007E+15	5.30311E+15	4.66355E+15	3.87694E+15	2.93820E+15	1.76583E+15
7	5.47679E+15	5.37184E+15	5.16152E+15	4.84457E+15	4.41803E+15	3.87781E+15	3.22080E+15	2.44116E+15	1.46695E+15
8	4.17181E+15	4.09016E+15	3.92669E+15	3.68098E+15	3.35220E+15	2.93939E+15	2.44160E+15	1.85536E+15	1.12431E+15
9	2.52061E+15	2.47040E+15	2.36991E+15	2.21908E+15	2.01791E+15	1.76682E+15	1.46743E+15	1.12446E+15	7.53468E+14
10	1.48596E+15	1.45590E+15	1.39581E+15	1.30588E+15	1.18656E+15	1.03904E+15	8.66206E+14	6.74924E+14	4.81670E+14
11	8.71983E+14	8.54135E+14	8.18533E+14	7.65440E+14	6.95452E+14	6.09849E+14	5.11269E+14	4.04903E+14	3.00176E+14
12	5.05249E+14	4.94828E+14	4.74086E+14	4.43280E+14	4.02941E+14	3.54101E+14	2.98646E+14	2.39784E+14	1.82339E+14
13	2.81912E+14	2.76073E+14	2.64476E+14	2.47317E+14	2.24981E+14	1.98161E+14	1.68020E+14	1.36341E+14	1.05491E+14
14	1.38623E+14	1.35747E+14	1.30043E+14	1.21628E+14	1.10720E+14	9.76937E+13	8.31472E+13	6.79373E+13	5.31246E+13

	10	11	12	13	14
1	1.48348E+15	8.70362E+14	5.04208E+14	2.81286E+14	1.38281E+14
2	1.45358E+15	8.52615E+14	4.93849E+14	2.75483E+14	1.35426E+14
3	1.39381E+15	8.17203E+14	4.73225E+14	2.63954E+14	1.29761E+14
4	1.30428E+15	7.64362E+14	4.42574E+14	2.46885E+14	1.21396E+14
5	1.18540E+15	6.94649E+14	4.02407E+14	2.24650E+14	1.10543E+14
6	1.03829E+15	6.09307E+14	3.53731E+14	1.97927E+14	9.75710E+13
7	8.65790E+14	5.10944E+14	2.98414E+14	1.67868E+14	8.30703E+13
8	6.74737E+14	4.04734E+14	2.39655E+14	1.36251E+14	6.78948E+13
9	4.81609E+14	3.00101E+14	1.82276E+14	1.05443E+14	5.31050E+13
10	3.24834E+14	2.10747E+14	1.31849E+14	7.78830E+13	3.97342E+13
11	2.10771E+14	1.41646E+14	9.11577E+13	5.49837E+13	2.84290E+13
12	1.31875E+14	9.11640E+13	6.01048E+13	3.69411E+13	1.93308E+13
13	7.79058E+13	5.49976E+13	3.69446E+13	2.30467E+13	1.21783E+13
14	3.97407E+13	2.84288E+13	1.93288E+13	1.21755E+13	6.47540E+12

FLUX FOR GROUP 2

HORIZONTAL PLANE K= 1

	1	2	3	4	5	6	7	8	9
1	7.56285E+15	7.45326E+15	7.24023E+15	6.93701E+15	6.54357E+15	5.95868E+15	5.26476E+15	4.56559E+15	3.98460E+15
2	7.45349E+15	7.34371E+15	7.13022E+15	6.82637E+15	6.43298E+15	5.85306E+15	5.16836E+15	4.48032E+15	3.90935E+15
3	7.24130E+15	7.13105E+15	6.91619E+15	6.60978E+15	6.21405E+15	5.64329E+15	4.97698E+15	4.31127E+15	3.76040E+15
4	6.93920E+15	6.82830E+15	6.61088E+15	6.29762E+15	5.88991E+15	5.33205E+15	4.69385E+15	4.06196E+15	3.54125E+15
5	6.54703E+15	6.43615E+15	6.21638E+15	5.89111E+15	5.45828E+15	4.92354E+15	4.32545E+15	3.73921E+15	3.25833E+15
6	5.96323E+15	5.85730E+15	5.64672E+15	5.33437E+15	4.92466E+15	4.43056E+15	3.88596E+15	3.35604E+15	2.92254E+15
7	5.26996E+15	5.17324E+15	4.98111E+15	4.69695E+15	4.32742E+15	3.88685E+15	3.40477E+15	2.93630E+15	2.55085E+15
8	4.57107E+15	4.48549E+15	4.31576E+15	4.06550E+15	3.74171E+15	3.35753E+15	2.93693E+15	2.52254E+15	2.16579E+15
9	3.99015E+15	3.91461E+15	3.76503E+15	3.54503E+15	3.26115E+15	2.92442E+15	2.55191E+15	2.16622E+15	1.78319E+15
10	3.16639E+15	3.10615E+15	2.98707E+15	2.81233E+15	2.58741E+15	2.32084E+15	2.02472E+15	1.71402E+15	1.40317E+15
11	2.36218E+15	2.31722E+15	2.22846E+15	2.09848E+15	1.93156E+15	1.73405E+15	1.51460E+15	1.28374E+15	1.05264E+15
12	1.65279E+15	1.62139E+15	1.55947E+15	1.46896E+15	1.35297E+15	1.21598E+15	1.06394E+15	9.03988E+14	7.43764E+14
13	1.04513E+15	1.02533E+15	9.86315E+14	9.29366E+14	8.56498E+14	7.70581E+14	6.75334E+14	5.75160E+14	4.74721E+14
14	5.14421E+14	5.04691E+14	4.85540E+14	4.57604E+14	4.21897E+14	3.79838E+14	3.33249E+14	2.84259E+14	2.35102E+14

	10	11	12	13	14
1	3.16140E+15	2.35808E+15	1.64967E+15	1.04306E+15	5.13363E+14
2	3.10142E+15	2.31332E+15	1.61842E+15	1.02335E+15	5.03683E+14
3	2.98285E+15	2.22496E+15	1.55679E+15	9.84525E+14	4.84622E+14
4	2.80882E+15	2.09552E+15	1.46667E+15	9.27822E+14	4.56810E+14
5	2.58469E+15	1.92921E+15	1.35112E+15	8.55238E+14	4.21245E+14
6	2.31891E+15	1.73232E+15	1.21459E+15	7.69610E+14	3.79332E+14
7	2.02350E+15	1.51343E+15	1.06296E+15	6.74631E+14	3.32878E+14
8	1.71336E+15	1.28303E+15	9.03357E+14	5.74684E+14	2.84004E+14
9	1.40292E+15	1.05227E+15	7.43400E+14	4.74423E+14	2.34939E+14
10	1.10459E+15	8.31646E+14	5.90197E+14	3.78107E+14	1.87700E+14
11	8.31787E+14	6.29414E+14	4.48936E+14	2.88793E+14	1.43731E+14
12	5.90376E+14	4.48996E+14	3.21783E+14	2.07789E+14	1.03661E+14
13	3.78277E+14	2.88874E+14	2.07821E+14	1.34609E+14	6.72830E+13
14	1.87797E+14	1.43781E+14	1.03685E+14	6.72873E+13	3.36765E+13

FLUX FOR GROUP 3

HORIZONTAL PLANE K= 1

	1	2	3	4	5	6	7	8	9
1	7.21076E+15	7.07446E+15	6.79610E+15	6.36149E+15	5.70520E+15	4.99567E+15	4.20445E+15	3.27838E+15	1.98829E+15
2	7.07461E+15	6.94051E+15	6.66685E+15	6.24001E+15	5.59620E+15	4.90009E+15	4.12381E+15	3.21528E+15	1.94974E+15
3	6.79684E+15	6.66742E+15	6.40372E+15	5.99347E+15	5.37628E+15	4.70854E+15	3.96286E+15	3.08961E+15	1.87301E+15
4	6.36299E+15	6.24133E+15	5.99421E+15	5.61186E+15	5.04054E+15	4.42042E+15	3.72256E+15	2.90259E+15	1.75887E+15
5	5.70753E+15	5.59832E+15	5.37784E+15	5.04134E+15	4.57953E+15	4.03681E+15	3.40512E+15	2.65619E+15	1.60841E+15
6	4.99868E+15	4.90288E+15	4.71079E+15	4.42193E+15	4.03753E+15	3.56922E+15	3.01454E+15	2.35246E+15	1.42263E+15
7	4.20773E+15	4.12687E+15	3.96544E+15	3.72448E+15	3.40632E+15	3.01507E+15	2.54859E+15	1.98986E+15	1.20112E+15
8	3.28139E+15	3.21810E+15	3.09205E+15	2.90450E+15	2.65750E+15	2.35321E+15	1.99010E+15	1.55558E+15	9.40753E+14
9	1.99029E+15	1.95162E+15	1.87466E+15	1.76019E+15	1.60937E+15	1.42324E+15	1.20145E+15	9.40865E+14	6.37431E+14
10	1.18518E+15	1.16202E+15	1.11597E+15	1.04758E+15	9.57678E+14	8.47297E+14	7.17696E+14	5.71449E+14	4.17771E+14
11	7.15500E+14	7.01479E+14	6.73639E+14	6.32401E+14	5.78440E+14	5.12762E+14	4.36960E+14	3.54027E+14	2.70227E+14
12	4.28576E+14	4.20178E+14	4.03533E+14	3.78955E+14	3.46964E+14	3.08373E+14	2.64462E+14	2.17332E+14	1.70340E+14
13	2.40932E+14	2.36221E+14	2.26897E+14	2.13168E+14	1.95382E+14	1.74078E+14	1.50073E+14	1.24577E+14	9.92426E+13
14	1.03668E+14	1.01645E+14	9.76454E+13	9.17684E+13	8.41779E+13	7.51258E+13	6.49816E+13	5.42607E+13	4.36109E+13

	10	11	12	13	14
1	1.18383E+15	7.14568E+14	4.27950E+14	2.40548E+14	1.03498E+14
2	1.16075E+15	7.00597E+14	4.19585E+14	2.35856E+14	1.01483E+14
3	1.11484E+15	6.72852E+14	4.03000E+14	2.26567E+14	9.74981E+13
4	1.04665E+15	6.31742E+14	3.78502E+14	2.12885E+14	9.16404E+13
5	9.56974E+14	5.77926E+14	3.46603E+14	1.95153E+14	8.40722E+13
6	8.46814E+14	5.12391E+14	3.08103E+14	1.73904E+14	7.50429E+13
7	7.17403E+14	4.36717E+14	2.64276E+14	1.49948E+14	6.49199E+13
8	5.71302E+14	3.53885E+14	2.17213E+14	1.24494E+14	5.42173E+13
9	4.17718E+14	2.70157E+14	1.70273E+14	9.91913E+13	4.35820E+13
10	2.91301E+14	1.96836E+14	1.27774E+14	7.58413E+13	3.36675E+13
11	1.96861E+14	1.37866E+14	9.18812E+13	5.55058E+13	2.48870E+13
12	1.27807E+14	9.18932E+13	6.25216E+13	3.83198E+13	1.73274E+13
13	7.58698E+13	5.55196E+13	3.83244E+13	2.37372E+13	1.08030E+13
14	3.36855E+13	2.48975E+13	1.73327E+13	1.08050E+13	4.94004E+12

POWER DENSITY (MWT/LITER)

HORIZONTAL PLANE K= 1

	1	2	3	4	5	6	7	8	9
1	2.78082E+00	2.73593E+00	2.64722E+00	2.51675E+00	2.92140E+00	2.60687E+00	2.21773E+00	1.76164E+00	2.39363E-01
2	2.73606E+00	2.69141E+00	2.60316E+00	2.47346E+00	2.86916E+00	2.55869E+00	2.17578E+00	1.72782E+00	2.34612E-01
3	2.64766E+00	2.60347E+00	2.51606E+00	2.38759E+00	2.76484E+00	2.46237E+00	2.09202E+00	1.66046E+00	2.25102E-01
4	2.51760E+00	2.47417E+00	2.38799E+00	2.26068E+00	2.60793E+00	2.31768E+00	1.96666E+00	1.55984E+00	2.10819E-01
5	2.92299E+00	2.87058E+00	2.76587E+00	2.60846E+00	2.39425E+00	2.12389E+00	1.80018E+00	1.42701E+00	1.91753E-01
6	2.60888E+00	2.56053E+00	2.46383E+00	2.31866E+00	2.12436E+00	1.88195E+00	1.59396E+00	1.26344E+00	1.67935E-01
7	2.21900E+00	2.17780E+00	2.09370E+00	1.96790E+00	1.80095E+00	1.59429E+00	1.35029E+00	1.07132E+00	1.39511E-01
8	1.76369E+00	1.72974E+00	1.66204E+00	1.56112E+00	1.42788E+00	1.26394E+00	1.07151E+00	8.52750E-01	1.06924E-01
9	2.39716E-01	2.34940E-01	2.25384E-01	2.11040E-01	1.91908E-01	1.68029E-01	1.39556E-01	1.06939E-01	7.16565E-02
10	1.41318E-01	1.38459E-01	1.32745E-01	1.24193E-01	1.12845E-01	9.88152E-02	8.23781E-02	6.41868E-02	4.58079E-02
11	8.29276E-02	8.12302E-02	7.78444E-02	7.27951E-02	6.61391E-02	5.79598E-02	4.86228E-02	3.85072E-02	2.85474E-02
12	4.80504E-02	4.70593E-02	4.50866E-02	4.21569E-02	3.83206E-02	3.36758E-02	2.84019E-02	2.28046E-02	1.73408E-02
13	2.68105E-02	2.62552E-02	2.51522E-02	2.35204E-02	2.13962E-02	1.88456E-02	1.59791E-02	1.29663E-02	1.00324E-02
14	1.31833E-02	1.29098E-02	1.23674E-02	1.15671E-02	1.05297E-02	9.29089E-03	7.90749E-03	6.46099E-03	5.05227E-03

	10	11	12	13	14
1	1.41083E-01	8.27734E-02	4.79514E-02	2.67510E-02	1.31509E-02
2	1.38239E-01	8.10856E-02	4.69662E-02	2.61991E-02	1.28793E-02
3	1.32554E-01	7.77179E-02	4.50047E-02	2.51026E-02	1.23405E-02
4	1.24040E-01	7.26925E-02	4.20898E-02	2.34794E-02	1.15450E-02
5	1.12734E-01	6.60627E-02	3.82698E-02	2.13647E-02	1.05129E-02
6	9.87438E-02	5.79465E-02	3.36407E-02	1.88233E-02	9.27923E-03
7	8.23386E-02	4.85919E-02	2.83799E-02	1.59647E-02	7.90017E-03
8	6.41690E-02	3.84911E-02	2.27917E-02	1.29578E-02	6.45695E-03
9	4.58021E-02	2.85403E-02	1.73348E-02	1.00279E-02	5.05041E-03
10	3.08924E-02	2.00425E-02	1.25391E-02	7.40685E-03	3.77881E-03
11	2.00448E-02	1.34709E-02	8.66930E-03	5.22955E-03	2.70367E-03
12	1.25416E-02	8.66990E-03	5.71610E-03	3.51318E-03	1.83840E-03
13	7.40901E-03	5.23039E-03	3.51352E-03	2.19179E-03	1.15819E-03
14	3.77944E-03	2.70365E-03	1.83821E-03	1.15792E-03	6.15825E-04

MATERIAL	ATOMIC WT.
U238C	2.38050E+02
PU239C	2.39050E+02
PU24CC	2.40050E+02
CARBON	1.20100E+01
NA	2.29900E+01
FE C	5.58500E+01
U238B	2.38050E+02
PU239B	2.39050E+02
FE B	5.58500E+01
FIS PR	1.00000E+00

ZONE= 1 VOLUME= 8.00000E+00 LITERS

MATERIAL	KILOGRAMS
U238C	2.52959E+01
PU239C	5.08043E+00
PU24CC	3.18855E-01
CARBON	3.19054E+00
NA	1.83224E+00
FE C	9.64402E+00
U238B	0.
PU239B	0.
FE B	0.
FIS PR	1.32829E-19

ZONE= 2 VOLUME= 5.60000E+01 LITERS

MATERIAL	KILOGRAMS
U238C	2.21339E+02
PU239C	4.44537E+01
PU24CC	2.67838E+00
CARBON	2.23338E+01
NA	1.28257E+01
FE C	6.75081E+01
U238B	0.
PU239B	0.
FE B	0.
FIS PR	9.29800E-19

ZONE= 3 VOLUME= 2.79000E+02 LITERS

MATERIAL	KILOGRAMS
U238C	0.
PU239C	0.
PU24CC	0.
CARBON	0.
NA	0.
FE C	0.
U238B	3.30823E+03
PU239B	1.10737E-15
FE B	1.60406E+02
FIS PR	4.63240E-18

ZONE 1 FLUX =2.0524E+16 VOLUME =8.CCCCE+CC LITERS

BURNABLE ISOTOPE NO.	MATERIAL NO.	NAME	ATOM DENSITY	FISSION RATE	ABSORPTION RATE	SIGMA FISSION	SIGMA ABSCRPTICN
1	1	U238C	8.000E-03	8.865E+16	4.739E+17	6.749E-02	3.608E-01
2	2	PU239C	1.600E-03	5.021E+17	5.825E+17	1.911E+00	2.217E+0C
3	3	PU240C	1.000E-04	7.218E+15	1.256E+16	4.396E-01	7.648E-01
4	7	U238B	0.	0.	0.	3.549E-02	2.890E-01
5	8	PU239B	0.	0.	0.	1.824E+00	2.073E+00
6	10	FIS PR	1.000E-20	0.	2.856E-01	0.	1.740E-01

ZONE 2 FLUX =1.1570E+16 VOLUME =5.60CCE+C1 LITERS

BURNABLE ISOTOPE NO.	MATERIAL NO.	NAME	ATOM DENSITY	FISSION RATE	ABSORPTION RATE	SIGMA FISSION	SIGMA ABSCRPTICN
1	1	U238C	1.000E-02	4.285E+17	2.257E+18	6.614E-02	3.484E-01
2	2	PU239C	2.000E-03	2.457E+18	2.838E+18	1.896E+00	2.190E+00
3	3	PU240C	1.200E-04	3.363E+16	5.82CE+16	4.326E-01	7.486E-01
4	7	U238B	0.	0.	0.	3.478E-02	2.805E-01
5	8	PU239B	0.	0.	0.	1.814E+00	2.056E+00
6	10	FIS PR	1.000E-20	0.	1.105E+0C	C.	1.706E-01

ZONE 3 FLUX =1.5677E+15 VOLUME =2.790CE+C2 LITERS

BURNABLE ISOTOPE NO.	MATERIAL NO.	NAME	ATOM DENSITY	FISSION RATE	ABSORPTION RATE	SIGMA FISSION	SIGMA ABSCRPTICN
1	1	U238C	0.	0.	0.	4.195E-02	2.867E-01
2	2	PU239C	0.	0.	0.	1.822E+00	2.079E+00
3	3	PU240C	0.	0.	0.	2.919E-01	5.828E-01
4	7	U238B	3.000E-02	2.894E+17	3.169E+18	2.206E-02	2.415E-01
5	8	PU239B	1.000E-20	7.728E+C0	8.694E+0C	1.767E+00	1.988E+00
6	10	FIS PR	1.000E-20	0.	7.241E-01	0.	1.656E-01

ZCNE= 1 BREEDING RATIO= .1142

ZCNE= 2 BREEDING RATIO= .5417

ZCNE= 3 BREEDING RATIO= .8418

SYSTEM BREEDING RATIO= 1.4978

T I M E = 30.000 D A Y S

MIXTURE NUMBER	MIX COMMAND	MATERIAL ATOMIC DENSITY
1	11 C	0.
2	11 1	.7846n912E-02
3	11 2	.15381915E-02
4	11 3	.12117540E-03
5	11 4	.20006000E-01
6	11 5	.60000000E-02
7	11 6	.13000000E-01
8	11 1C	.19091724E-03
9	12 C	0.
10	12 1	.98953719E-02
11	12 2	.19540337E-02
12	12 3	.1346n536E-03
13	12 4	.20000000E-01
14	12 5	.60000000E-02
15	12 6	.13000000E-01
16	12 1C	.13434613E-03
17	13 C	0.
18	13 7	.29970373E-01
19	13 8	.26812562E-04
20	13 9	.62000000E-02
21	13 1C	.28015673E-05

TIME (MINUTES)	OUTER ITERATIONS	IN. IT. 3D LOOP	IN. IT. 2D LOOP	EIGENVALUE SLOPE	EIGENVALUE	LAMBDA
1.68	0	0	0	0.	.10456522E+01	0.
1.80	1	6	174	0.	.10362425E+01	.10362425E+01
1.87	2	4	130	0.	.10356349E+01	.99941370E+00
1.92	3	3	102	0.	.10351833E+01	.99956389E+00
1.98	4	3	116	0.	.10347714E+01	.99960211E+00
2.05	5	3	129	0.	.10344213E+01	.99966171E+00
2.11	6	3	133	0.	.10341211E+01	.99970974E+00
2.18	7	3	130	0.	.10338677E+01	.99975504E+00
2.24	8	3	112	0.	.10336587E+01	.99979781E+00
2.29	9	3	106	0.	.10334829E+01	.99982988E+00
2.35	10	3	98	0.	.10333371E+01	.99985900E+00
2.40	11	3	98	0.	.10332156E+01	.99988238E+00
2.45	12	3	84	0.	.10331129E+01	.99990064E+00

MATERIAL	ATOMIC WT.
U238C	2.38050E+02
PU239C	2.39050E+02
PU24CC	2.40050E+02
CARBON	1.20100E+01
NA	2.29000E+01
FE C	5.58500E+01
U238B	2.38050E+02
PU239B	2.39050E+02
FE B	5.58500E+01
FIS PR	1.00000E+00

ZONE= 1 VOLUME= 8.00000E+00 LITERS

MATERIAL	KILOGRAMS
U238C	2.48117E+01
PU239C	4.88417E+00
PU24CC	3.86374E-01
CARBON	3.19054E+00
NA	1.83224E+00
FE C	9.64402E+00
U238B	0.
PU239B	0.
FE B	0.
FIS PR	2.53593E-03

ZONE= 2 VOLUME= 5.60000E+01 LITERS

MATERIAL	KILOGRAMS
U238C	2.19023E+02
PU239C	4.34321E+01
PU24CC	3.00616E+00
CARBON	2.23338E+01
NA	1.28257E+01
FE C	6.75081E+01
U238B	0.
PU239B	0.
FE B	0.
FIS PR	1.24915E-02

ZONE= 3 VOLUME= 2.79000E+02 LITERS

MATERIAL	KILOGRAMS
U238C	0.
PU239C	0.
PU24CC	0.
CARBON	0.
NA	0.
FE C	0.
U238B	3.30496E+03
PU239B	2.96915E+00
FE B	1.60406E+02
FIS PR	1.29780E-03